SAMSUNG CONFIDENTIAL
THIS DOCUMENT CONTAINS CONFIDENTIAL
PROPRIETARY INFORMATION THAT IS
SAMSUNG ELECTRONICS CO'S PROPERTY.
DO NOT DISCLOSE TO OR DUPLICATE FOR OTHERS
EXCEPT AS AUTHORIZED BY SAMSUNG.

SM-M305F_REV03_SWA_64G

2019.02.12

sheet01 : GSM / WCDMA / LTE RF

sheet02 : TRANCEIVER, DRX

sheet03 : SENSORS, DMB, CONNECTIVITY

sheet04 : LASSEN O+(EXYNOS7904)

sheet05 : PMIC(Main,IF), KEY, MOTOR, eMMC, IF CON

sheet06 : AUDIO, SD/SIM, SHIELD CAN

sheet07 : CAMERA, DISPLAY

Engineer:			
Drawn by::			
R&D CHK:	TITLE: SM-M305F		Size:
DOC CTRL CHK:			
MFG ENGR CHK:			
Changed by: user93	Date Changed:	Time Changed:	QA CHK:
REV	Drawing Number:		Page: 0

SAMSUNG CONFIDENTIAL
THIS DOCUMENT CONTAINS CONFIDENTIAL
PROPRIETARY INFORMATION THAT IS
SAMSUNG ELECTRONICS CO'S PROPERTY.
DO NOT DISCLOSE TO OR DUPLICATE FOR OTHERS
EXCEPT AS AUTHORIZED BY SAMSUNG.

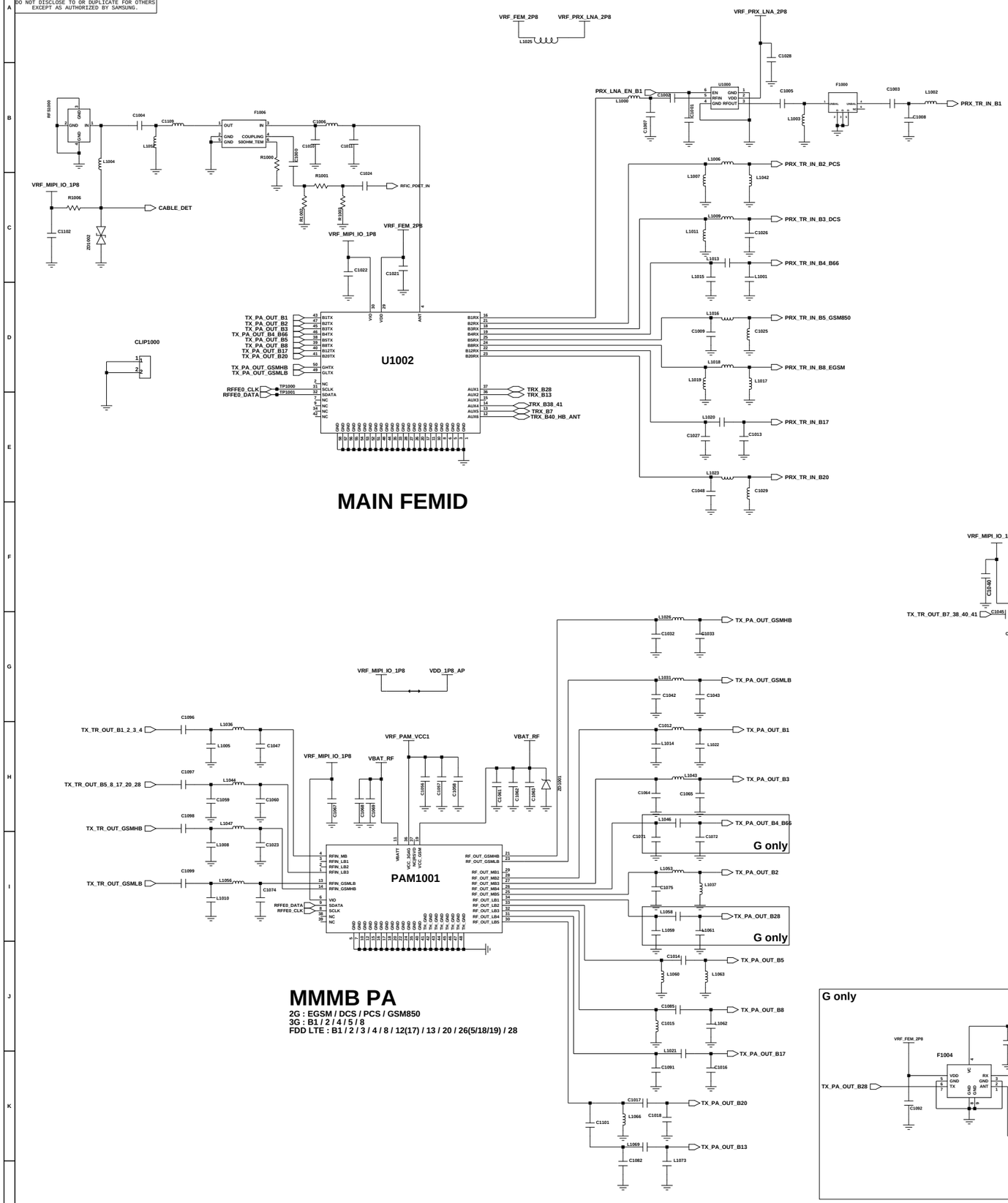

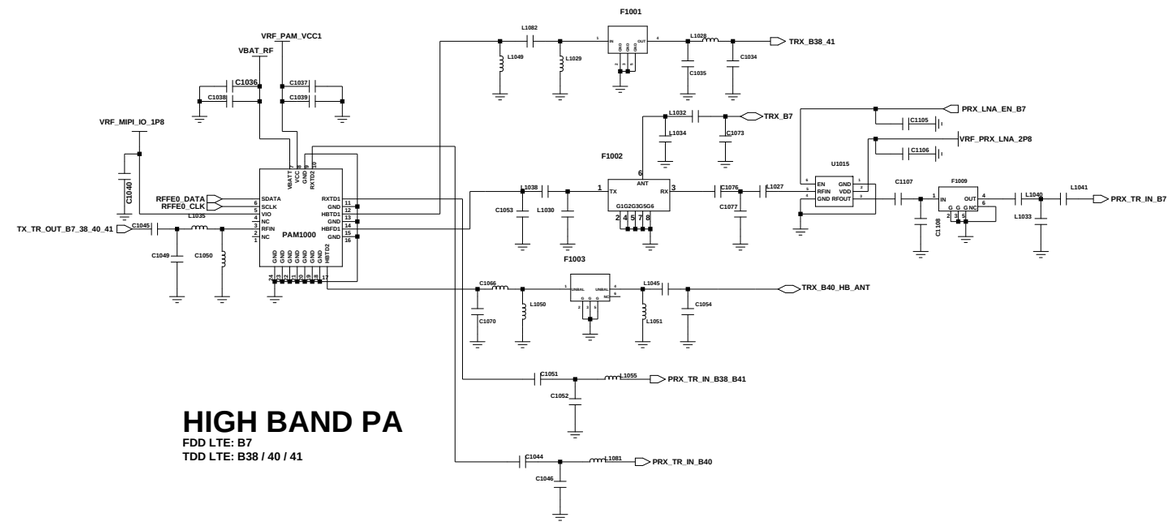

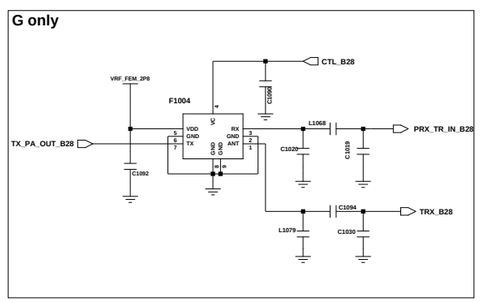

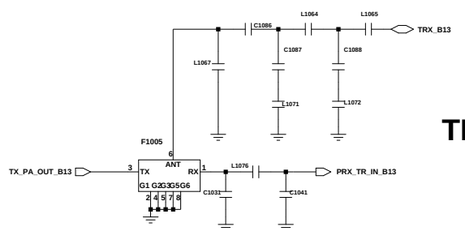

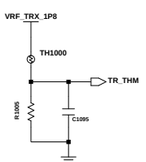

Engineer: user	SAMSUNG ELECTRONICS		
Drawn by: user			
R&D CHK:	TITLE: M30_RF	Size: 16 1 12 A	
DOC CTRL CHK:			
MFG ENGR CHK:			
Changed by: user	Date Changed: Monday, April 23, 2018	Time Changed: 8:49:04 pm	QA CHK:
REV:	Drawing Number:	Page: 1	

SAMSUNG CONFIDENTIAL
THIS DOCUMENT CONTAINS CONFIDENTIAL
PROPRIETARY INFORMATION THAT IS
SAMSUNG ELECTRONICS CO'S PROPERTY.
DO NOT DISCLOSE TO OR DUPLICATE FOR OTHERS
EXCEPT AS AUTHORIZED BY SAMSUNG.

DRX

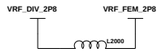

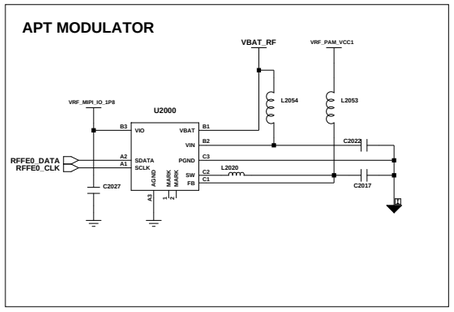

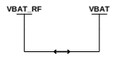

APT MODULATOR

GND

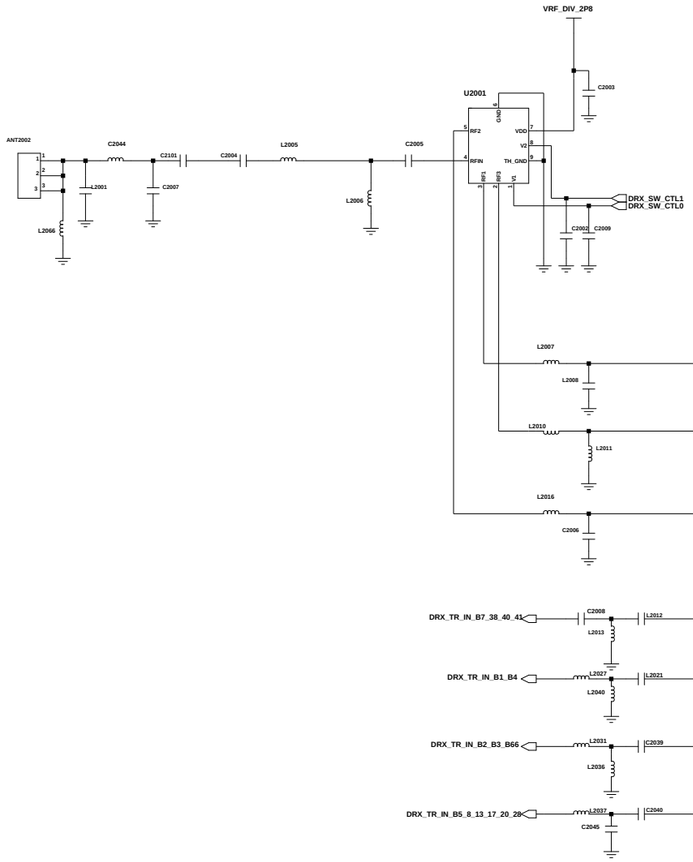

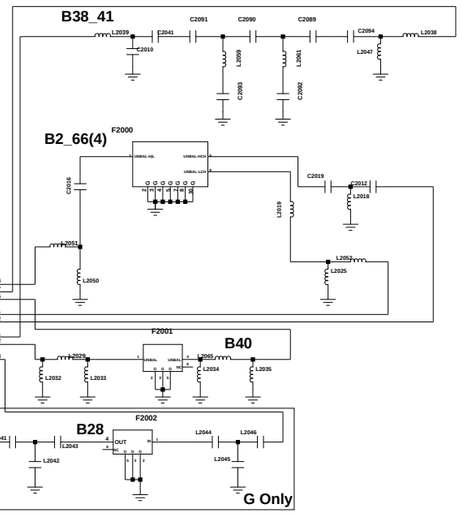

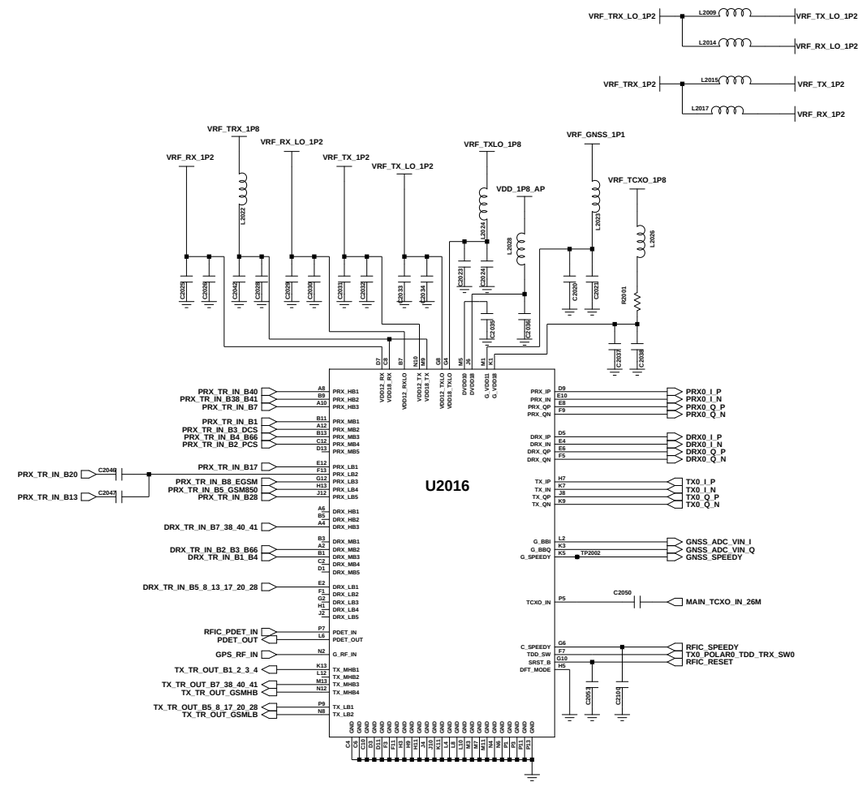

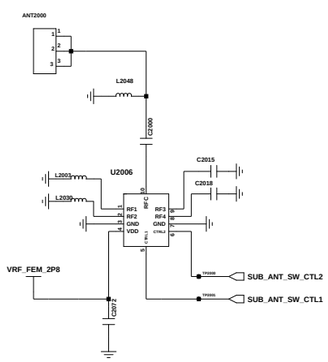

TRANCEIVER

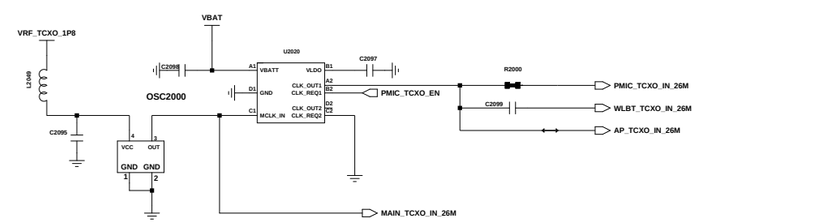

Engineer	DRX, TRANCEIVER		
Drawn by:			
R&D CHK:	TITLE:	Size:	
DOC CTRL CHK:	SM-M305F		
MFG ENGR CHK:			
Changed by: / Date Changed: / Time Changed: / QA CHK:	Drawing Number	2/7	

SAMSUNG CONFIDENTIAL
THIS DOCUMENT CONTAINS CONFIDENTIAL
PROPRIETARY INFORMATION THAT IS
SAMSUNG ELECTRONICS CO'S PROPERTY.
DO NOT DISCLOSE TO OR DUPLICATE FOR OTHERS
EXCEPT AS AUTHORIZED BY SAMSUNG.

BT/WIFI

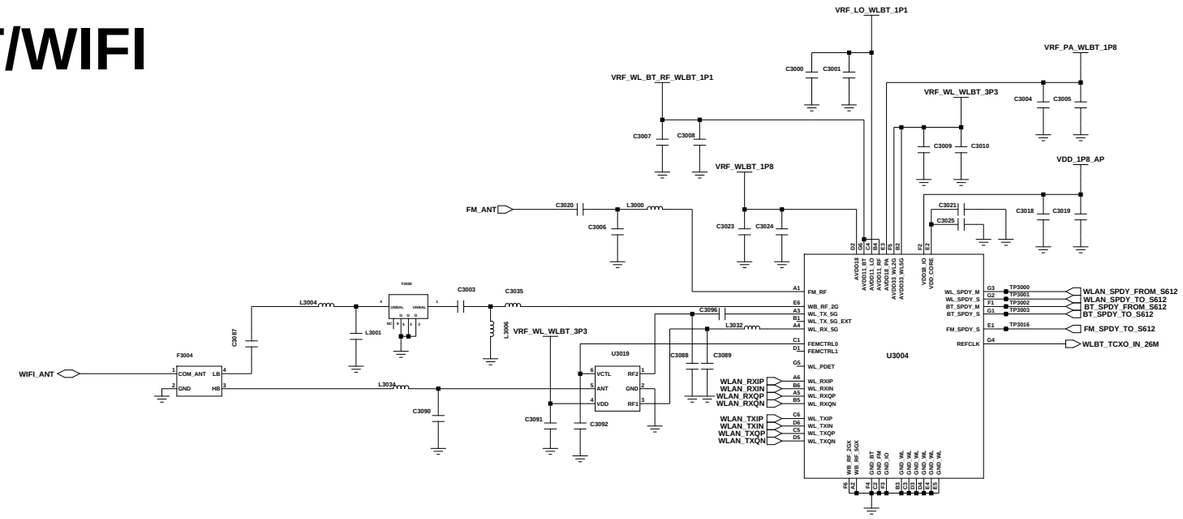

NFC

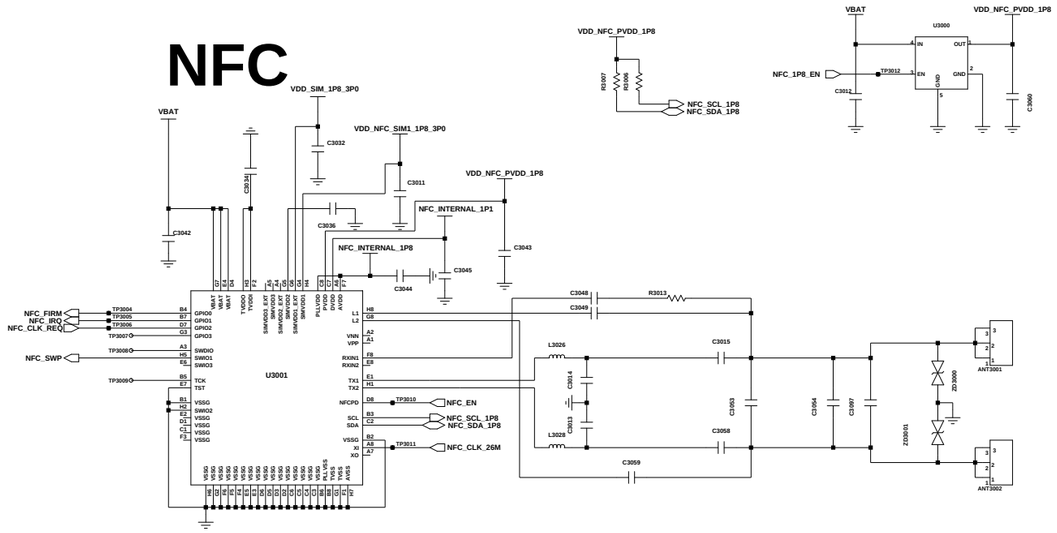

NFC	NFC PART	Power supply of SIM1		NFC GPIO 14	
	U3000	R6001	R6018	R4012	R4013
NFC	CONNECT	short	open	10K ohm	open
nonNFC	NC	open	short	open	10K ohm

GPS

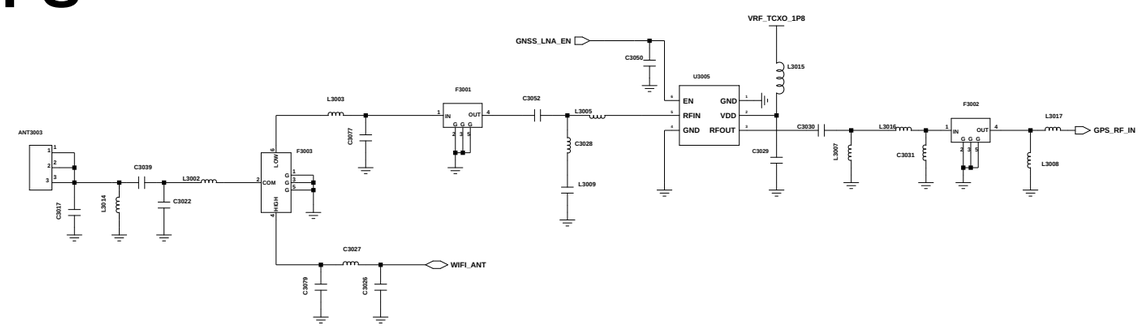

SENSORS

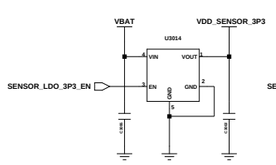

SENSOR LDO

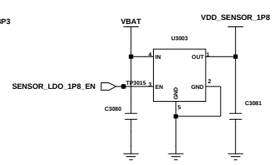

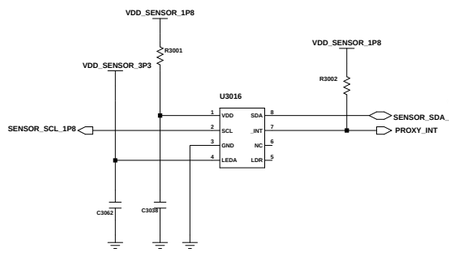

Proxi Sensor

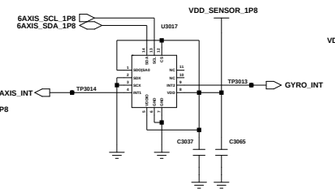

6 AXIS(ACC+GRYO)

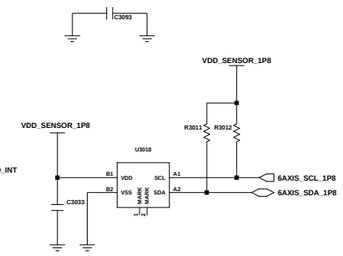

MAGNETIC

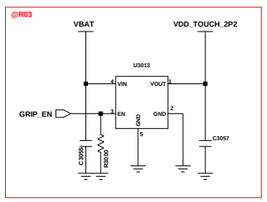

Grip Sensor

Engineer:	SENSOR, WIFI/BT/GPS/NFC
Drawn by:	
R&D CHK:	TITLE: SM-M305F
DOC CTRL CHK:	Size:
MFG ENGR CHK:	
Changed by: user93 / Date Changed: / Time Changed: / QA CHK:	REV: / Drawing Number: / Page: 3/7

SAMSUNG CONFIDENTIAL
THIS DOCUMENT CONTAINS CONFIDENTIAL
AND PROPRIETARY INFORMATION OF
SAMSUNG ELECTRONICS CO'S PROPERTY.
DO NOT DISCLOSE TO OR DUPLICATE FOR OTHERS
EXCEPT AS AUTHORIZED BY SAMSUNG.

EXYNOS7904 (Lassen O+)

POP LP4 4G : 1105-002915
POP LP4 6G : 1105-002939

AP JTAG

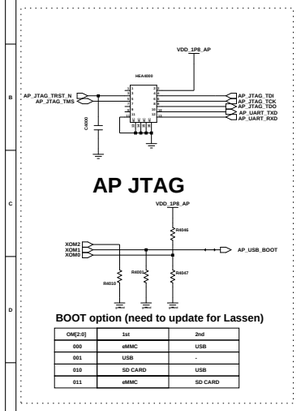

BOOT option (need to update for Lassen)

OM[2:0]	1st	2nd
000	eMMC	USB
001	USB	-
010	SD CARD	USB
011	eMMC	SD CARD

UCP400-1

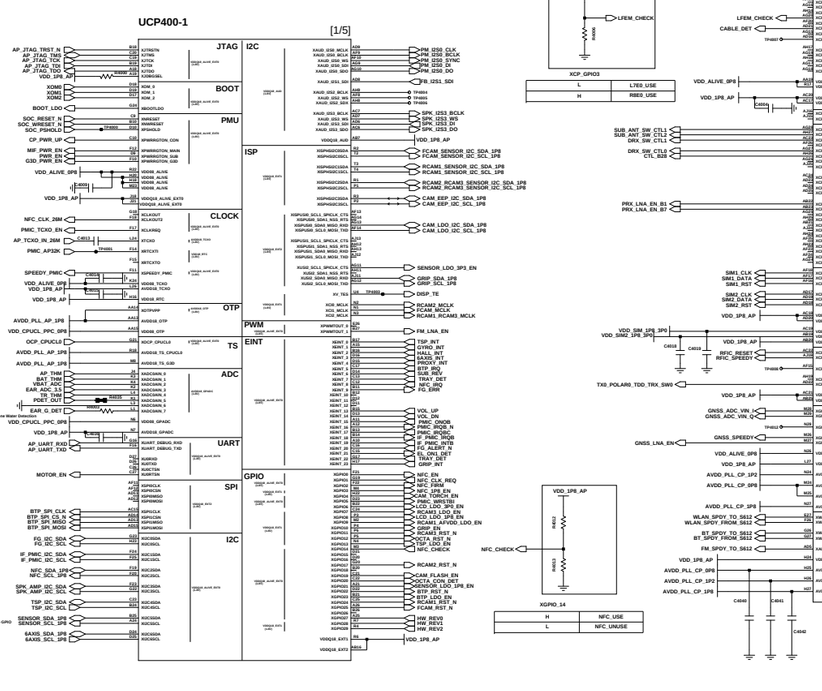
[1/5]
JTAG
BOOT
PMU
CLOCK
OTP
TS
ADC
UART
SPI
I2C
PWM
EINT
GPIO
ISP
AP_JTAG_TRST_N
AP_JTAG_TMS
AP_JTAG_TCK
AP_JTAG_TDI
AP_JTAG_TDO
VDD_1P8_AP
XOM0
XOM2
XOM3
BOOT_LDO
SOC_RESET_N
SOC_WRESET_N
SOC_PSHOLD
CP_PWR_UP
MIF_PWR_EN
PWR_EN
G3D_PWR_EN
VDD_ALIVE_SP8
NFC_CLK_26M
PMIC_TCXO_EN
AP_TCXO_IN_26M
PMIC_AP32K
SPEEDY_PMIC
AVDD_PLL_AP_1P8
AVDD_PLL_CP_1P8
OCP_CPUCL0
AVDD_PLL_AP_1P8
AVDD_PLL_AP_1P8
AP_THM
BAT_THM
EAR_ADC_1.5
EAR_ADC_3.5
TA_THM
PORT_OUT
EAR_G_DET
VDD_CPUCL_PPC_0P8
AP_UART_RXD
AP_UART_TXD
MOTOR_EN
BTP_SPI_CLK
BTP_SPI_CS_N
BTP_SPI_MISO
BTP_SPI_MOSI
FG_I2C_SDA
FG_I2C_SCL
IF_PMIC_I2C_SDA
IF_PMIC_I2C_SCL
NFC_SDA_1P8
NFC_SCL_1P8
SPK_AMP_I2C_SDA
SPK_AMP_I2C_SCL
TSP_I2C_SDA
TSP_I2C_SCL
SENSOR_SDA_1P8
SENSOR_SCL_1P8
6AXIS_SDA_1P8
6AXIS_SCL_1P8
need to check Secure GPIO
XRTCTN
XTCK
XTDI
XTDO
XOM_0
XOM_1
XMDDTCLDO
AVDD_PLL_AP_1P8
XCLKOUT
XCLKOUT2
XCLKREQ
XTCXO
XRTCXO
XSPEEDY_PMIC
XSDA_TCXO
XSCL_TCXO
XSDA_RTC
XOTPVPP
XDDR_OTP
XDCP_CPUCL0
AVDD_PLL_CP_1P8
XADCAIN_0
XADCAIN_1
XADCAIN_2
XADCAIN_3
XADCAIN_4
XADCAIN_5
XADCAIN_6
XADCAIN_7
XUART_0SBUS_RXD
XUART_0SBUS_TXD
XUART0CTS
XUART0RTS
XSPI0CLK
XSPI0CSN
XSPI0MISO
XSPI0MOSI
XI2C0SDA
XI2C0SCL
XI2C1SDA
XI2C1SCL
XI2C2SDA
XI2C2SCL
XI2C3SDA
XI2C3SCL
XI2C4SDA
XI2C4SCL
XI2C5SDA
XI2C5SCL
XI2C6SDA
XI2C6SCL
XI2C7SDA
XI2C7SCL
XI2C8SDA
XI2C8SCL
XI2C9SDA
XI2C9SCL
XI2C10SDA
XI2C10SCL
XI2C11SDA
XI2C11SCL
XI2C12SDA
XI2C12SCL
XISP0SDA
XISP0SCL
XISP1SDA
XISP1SCL
XISP2SDA
XISP2SCL
XISP3SDA
XISP3SCL
XISP4SDA
XISP4SCL
XISP5SDA
XISP5SCL
XISP6SDA
XISP6SCL
XISP7SDA
XISP7SCL
XISP8SDA
XISP8SCL
XISP9SDA
XISP9SCL
XISP10SDA
XISP10SCL
XISP11SDA
XISP11SCL
XISP12SDA
XISP12SCL
XISP13SDA
XISP13SCL
XISP14SDA
XISP14SCL
XISP15SDA
XISP15SCL
XISP16SDA
XISP16SCL
XISP17SDA
XISP17SCL
XISP18SDA
XISP18SCL
XISP19SDA
XISP19SCL

SAMSUNG CONFIDENTIAL
THIS DOCUMENT CONTAINS CONFIDENTIAL
AND PROPRIETARY INFORMATION OF
SAMSUNG ELECTRONICS CO'S PROPERTY.
DO NOT DISCLOSE TO OR DUPLICATE FOR OTHERS
EXCEPT AS AUTHORIZED BY SAMSUNG.

MAIN_PMIC

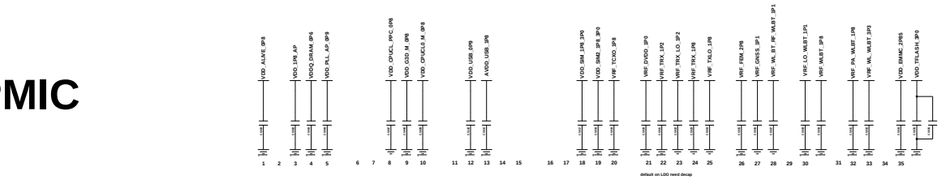

IF_PMIC

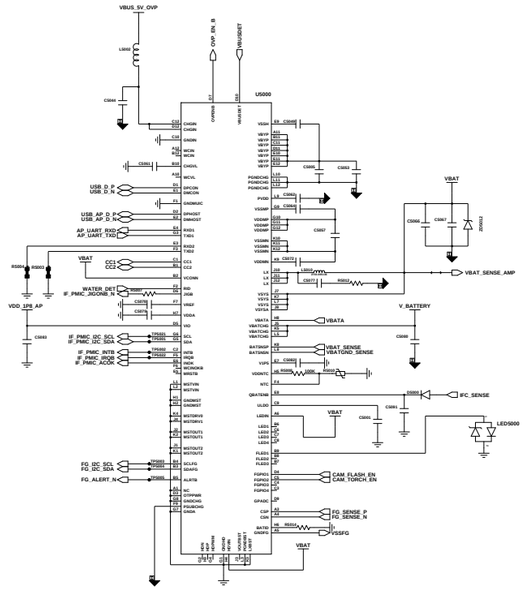

IF PMIC(S2MU106)

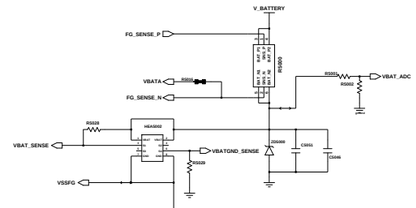

BATTERY CON

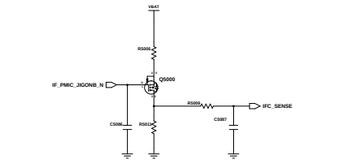

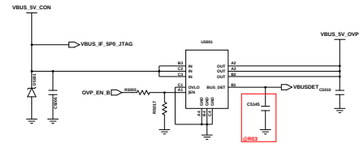

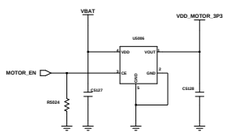

MOTOR

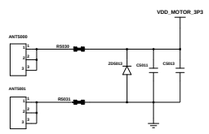

MOTOR

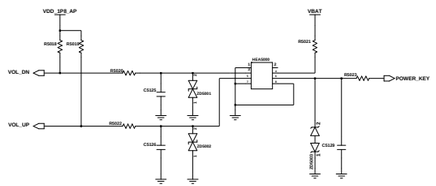

VOLUME KEY POWER KEY

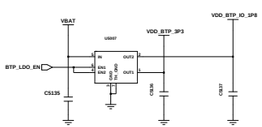

FPS PWR

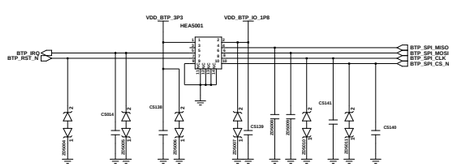

Finger Print Sensor

eMMC

64GB : 1107-002633
128GB : 1107-002639

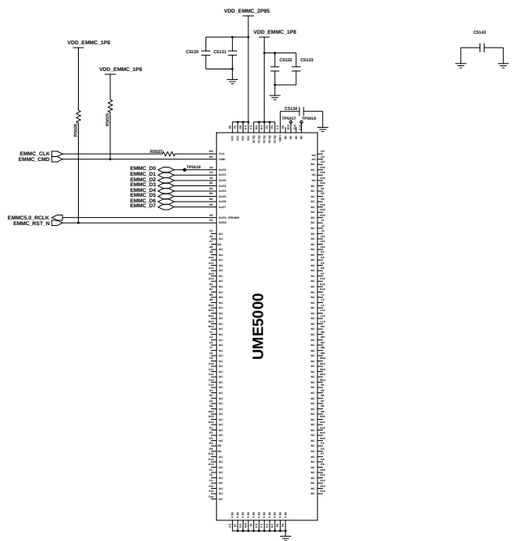

Engineer:	PMIC/IF PMIC/eMMC
Drawn by:	
R&D CHK:	TITLE: SM-M305F
DOC CTRL CHK:	
MFG ENGR CHK:	
Changed by: / Date Changed: / Time Changed:	Q4 CHK: / REV: / Drawing Number: / Page 1p1

SAMSUNG CONFIDENTIAL
THIS DOCUMENT CONTAINS CONFIDENTIAL PROPRIETARY INFORMATION THAT IS SAMSUNG ELECTRONICS CO'S PROPERTY. DO NOT DISCLOSE TO OR DUPLICATE FOR OTHERS EXCEPT AS AUTHORIZED BY SAMSUNG.

AUDIO

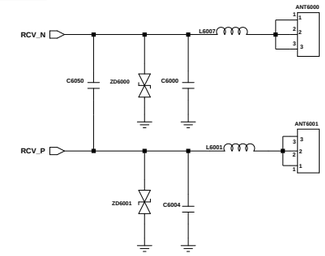

RCV CONTACT

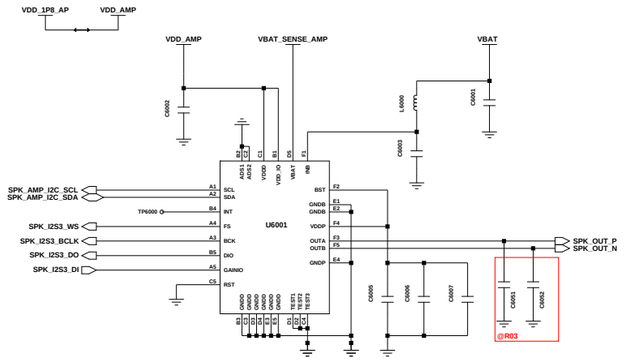

Audio AMP

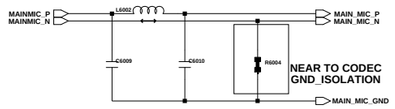

MAIN MIC

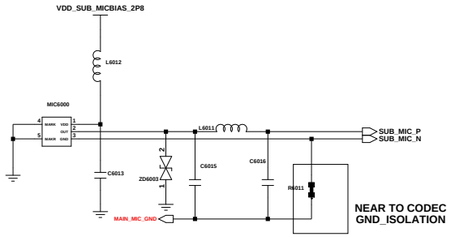

Sub MIC

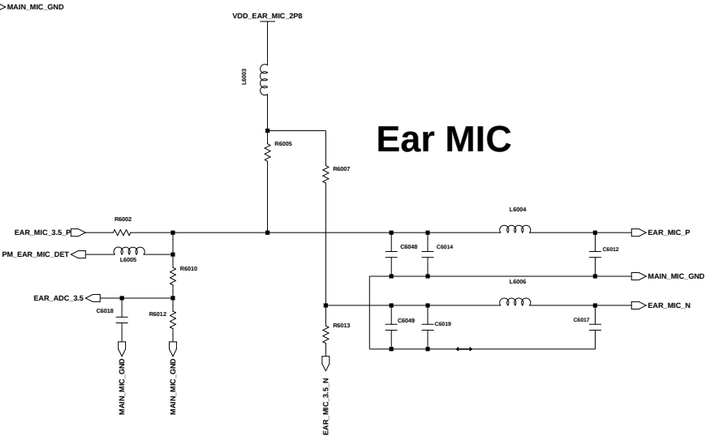

Ear MIC

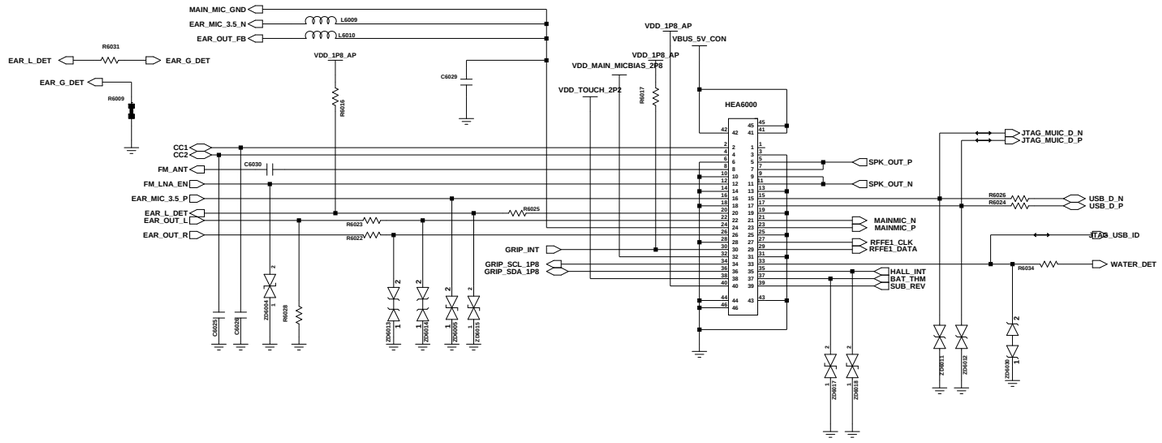

MAIN FPCB

SIM & SD CARD (3IN3)

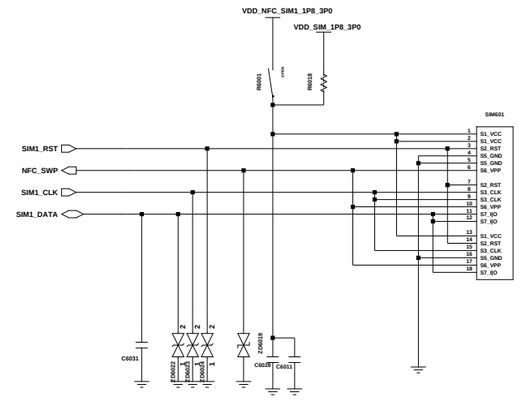

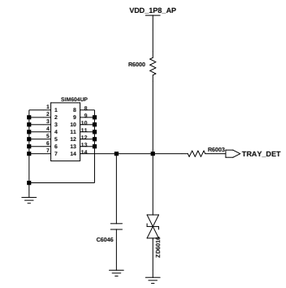

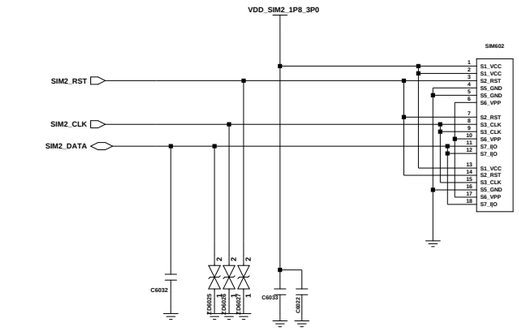

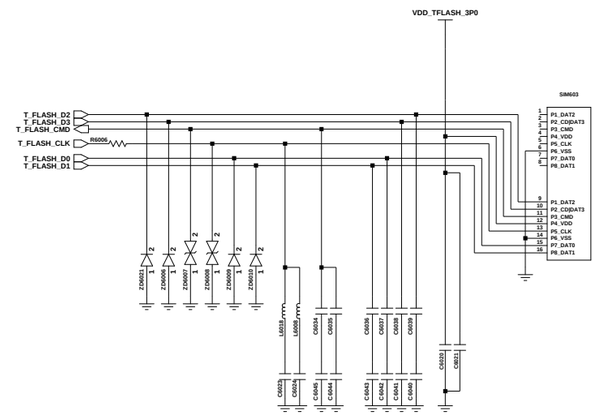

SHIELD CAN

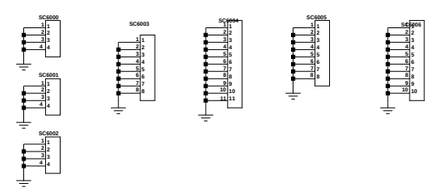

2D BARCODE

	FN (EUR, CIS)	F (MEA)	G (SEA, SWA)	GN (BR)	M	
R6015			Solder	Solder	Solder	
R6014	Solder	Solder				
R6019	Solder					
R6021				Solder	Solder	

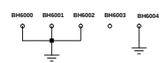

BOTH HOLE

Engineer:	
Drawn by:	AUDIO, SIM/SD, SHIELD CAN
R&D CHK:	TITLE: SM-M305F
DOC CTRL CHK:	
MFG ENGR CHK:	

Size:

Changed by:	Date Changed:	Time Changed:	QA CHK:	REV:	Drawing Number:	Page:6/7

SAMSUNG CONFIDENTIAL
THIS DOCUMENT CONTAINS CONFIDENTIAL
PROPRIETARY INFORMATION THAT IS
SAMSUNG ELECTRONICS CO'S PROPERTY.
DO NOT DISCLOSE TO OR DUPLICATE FOR OTHERS
EXCEPT AS AUTHORIZED BY SAMSUNG.

CAMERA_PART

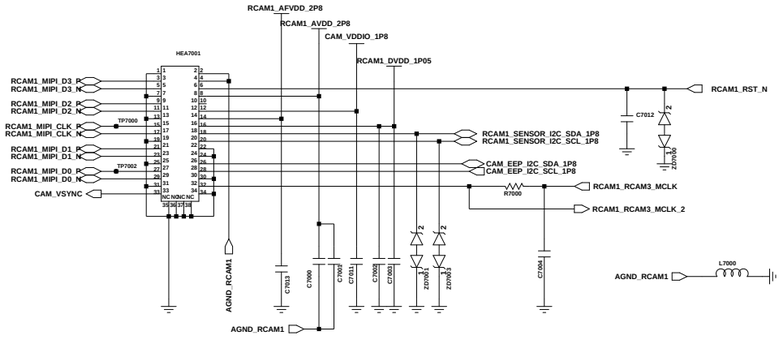

RCAM1_13M CAMERA(34PIN)

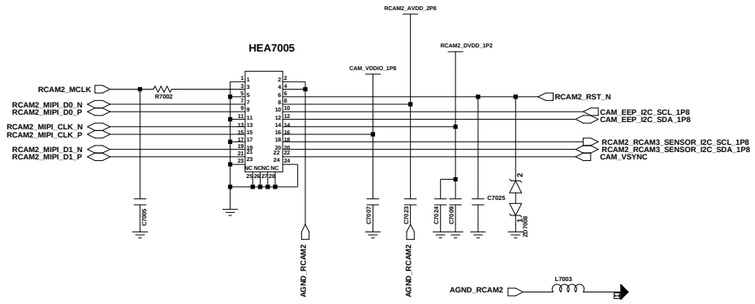

RCAM2_SUPER WIDE_5M CAMERA(24PIN)

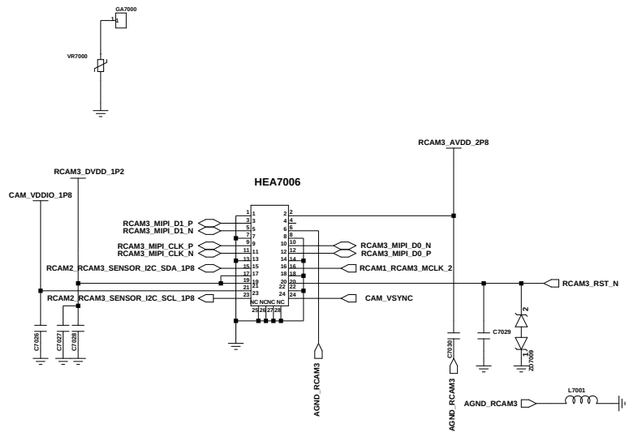

RCAM3_BOKEH_5M CAMERA(24PIN)

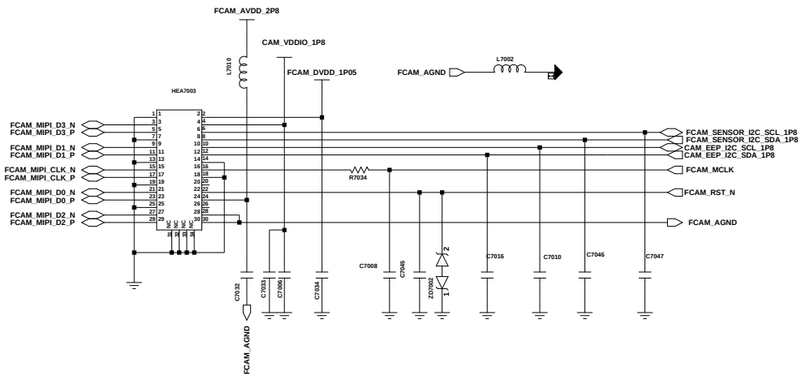

FRONT_16M CAMERA (30PIN)

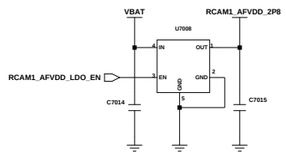

RCAM1 LDO

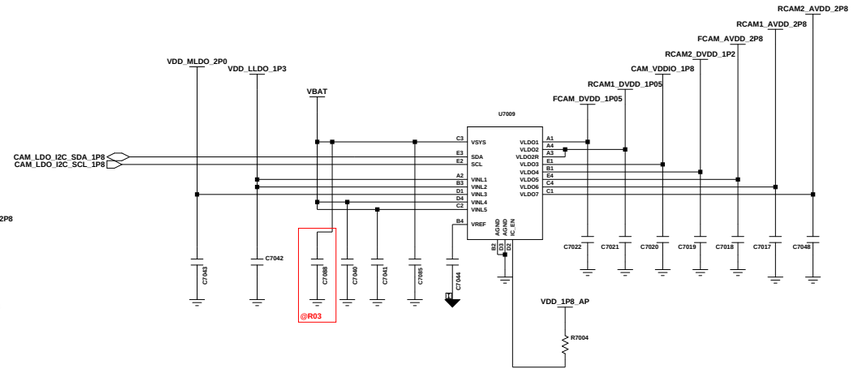

CAM PMIC

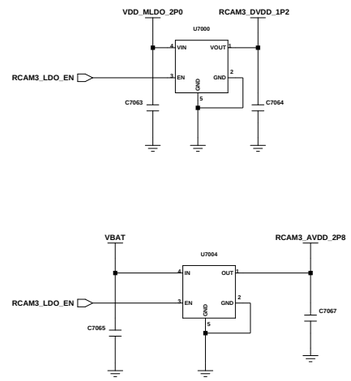

RCAM3 LDO

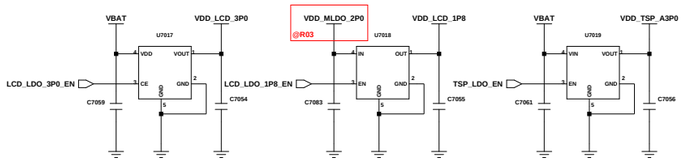

OCTA LDO

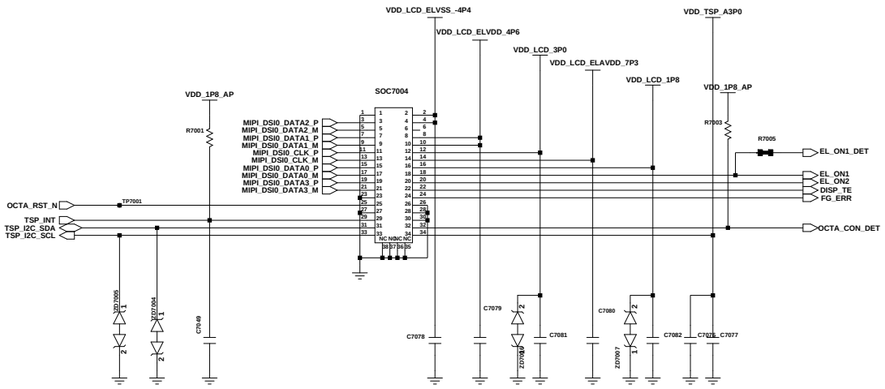

6.38" FHD+ DISPLAY

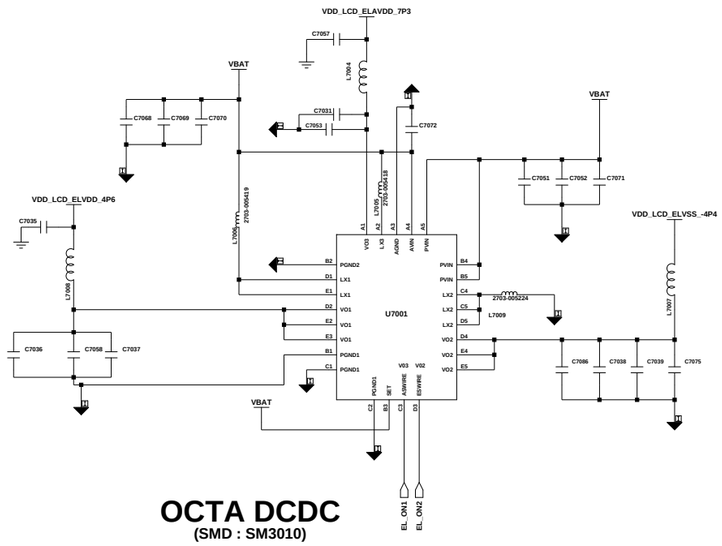

OCTA DCDC
(SMD : SM3010)

Engineer:			
Drawn by:	CAMERA, DISPLAY		
R&D CHK:	TITLE:	Size:	
DOC CTRL CHK:	SM-M305F		
MFG ENGR CHK:			
Changed by:	Date Changed:	Time Changed:	QA CHK:
REV	Drawing Number:	Page: 2/7	

SAMSUNG CONFIDENTIAL
THIS DOCUMENT CONTAINS CONFIDENTIAL
PROPRIETARY INFORMATION THAT IS
SAMSUNG ELECTRONICS CO'S PROPERTY.
DO NOT DISCLOSE TO OR DUPLICATE FOR OTHERS
EXCEPT AS AUTHORIZED BY SAMSUNG.

SM-M305F_REV03_LA_64G

2019.01.29

sheet01 : GSM / WCDMA / LTE RF
sheet02 : TRANCEIVER, DRX
sheet03 : SENSORS, DMB, CONNECTIVITY
sheet04 : LASSEN O+(EXYNOS7904)
sheet05 : PMIC(Main,IF), KEY, MOTOR, eMMC, IF CON
sheet06 : AUDIO, SD/SIM, SHIELD CAN
sheet07 : CAMERA, DISPLAY

Engineer:			
Drawn by::			
R&D CHK:	TITLE:		Size:
DOC CTRL CHK:	SM-M305F		
MFG ENGR CHK:			
Changed by: user93	Date Changed:	Time Changed:	QA CHK:
REV	Drawing Number:		Page: 0

SAMSUNG CONFIDENTIAL
THIS DOCUMENT CONTAINS CONFIDENTIAL
PROPRIETARY INFORMATION THAT IS
SAMSUNG ELECTRONICS CO'S PROPERTY.
DO NOT DISCLOSE TO OR DUPLICATE FOR OTHERS
EXCEPT AS AUTHORIZED BY SAMSUNG.

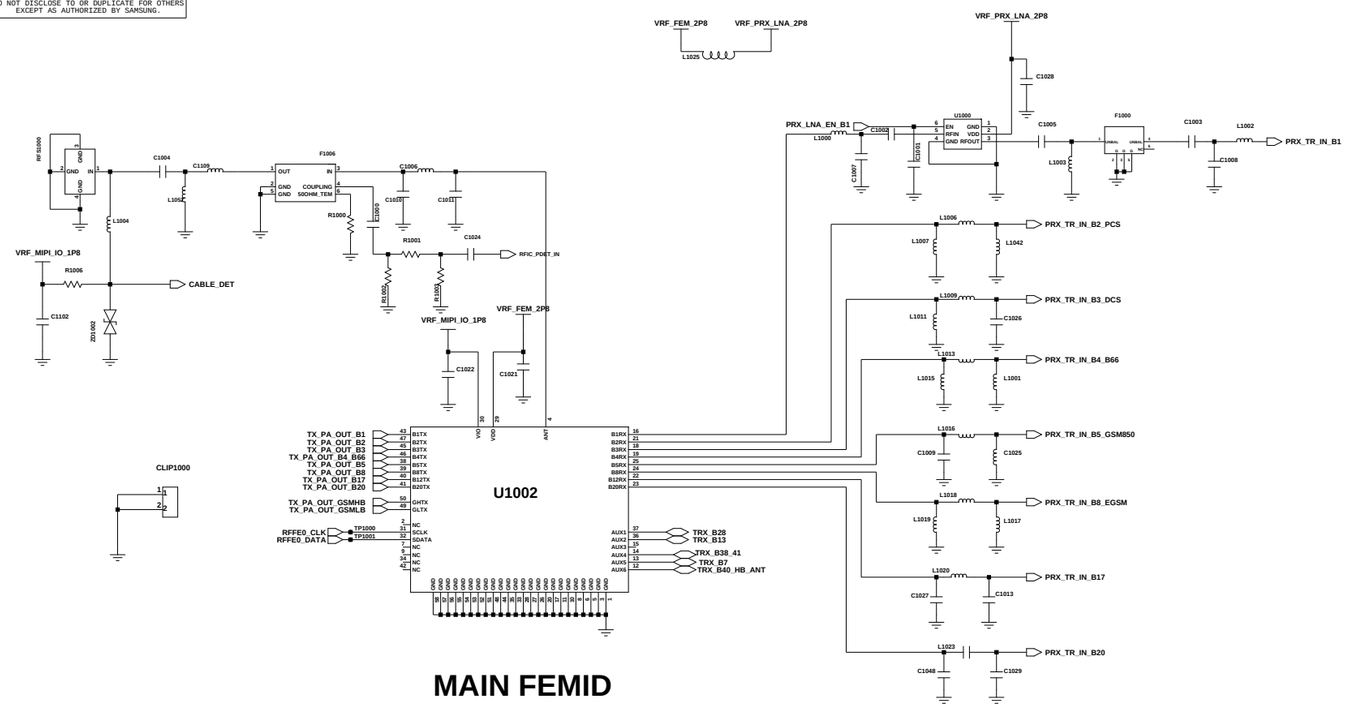

MAIN FEMID

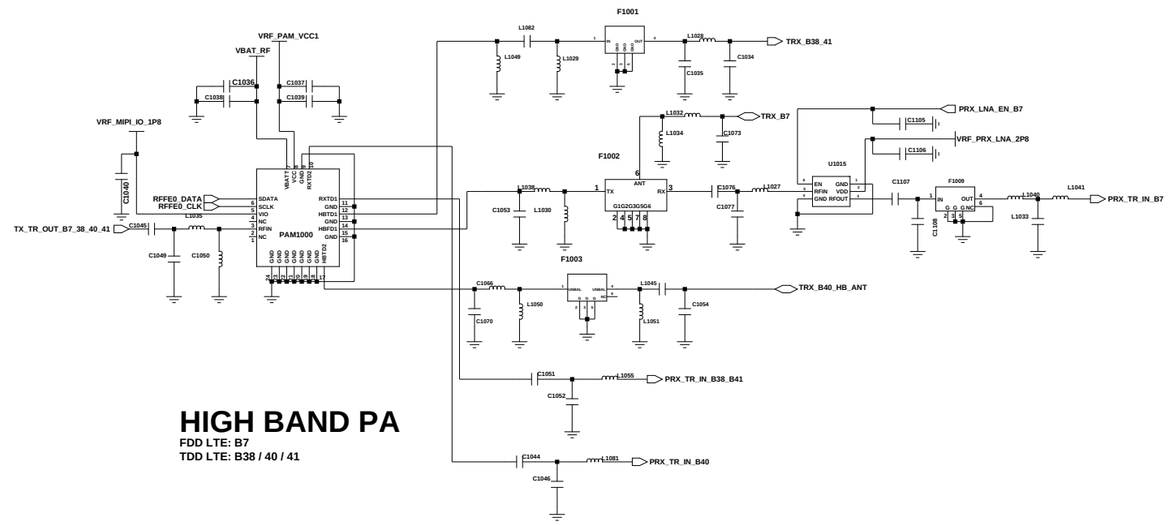

HIGH BAND PA

FDD LTE: B7
TDD LTE: B38 / 40 / 41

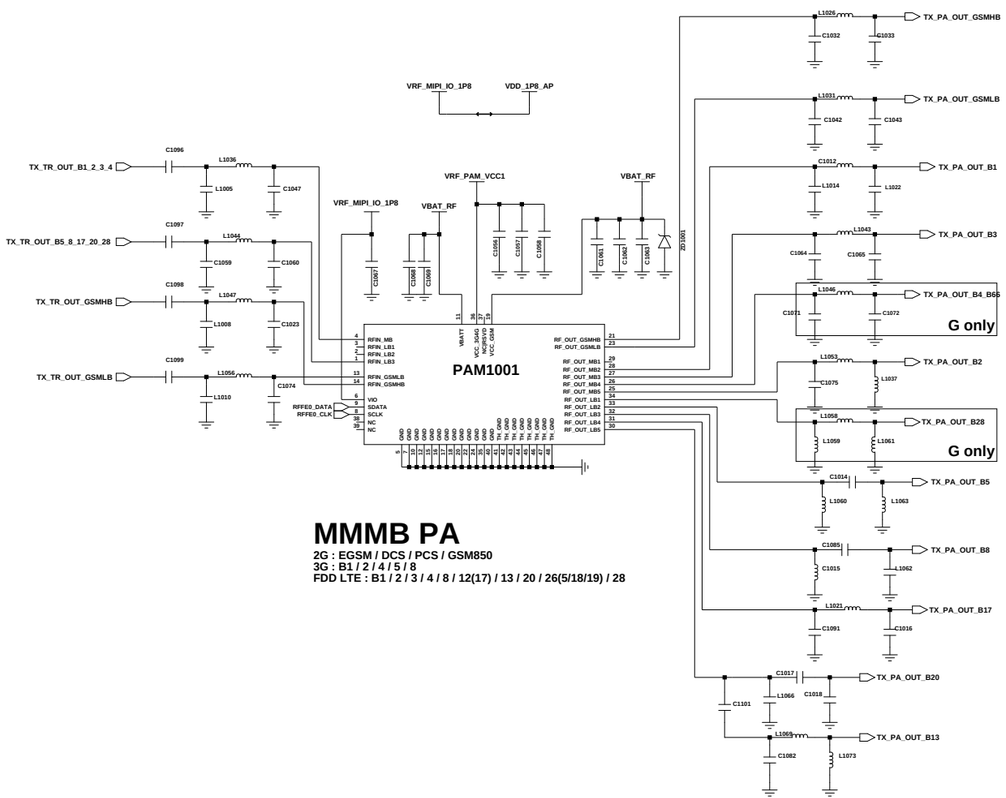

MMMB PA

2G : EGSM / DCS / PCS / GSM850
3G : B1 / 2 / 4 / 5 / 8
FDD LTE : B1 / 2 / 3 / 4 / 8 / 12(17) / 13 / 20 / 26(5/18/19) / 28

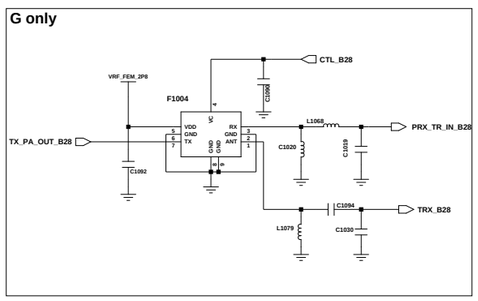

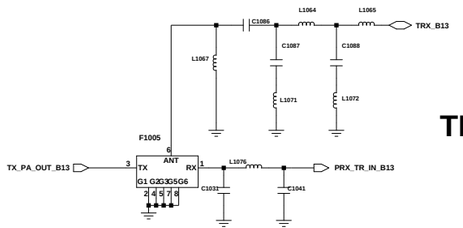

THERMISTER

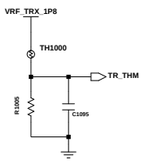

Engineer: user	SAMSUNG ELECTRONICS	
Drawn by: user		
R&D CHK:	TITLE: M30_RF	Size: 16 1 12 A
DOC CTRL CHK:		
MFG ENGR CHK:		

Changed by:	Date Changed:	Time Changed:	QA CHK:	REV:	Drawing Number:	Page:
user	Monday, April 23, 2018	8:49:04 pm				1

SAMSUNG CONFIDENTIAL
THIS DOCUMENT CONTAINS CONFIDENTIAL
PROPRIETARY INFORMATION THAT IS
SAMSUNG ELECTRONICS CO'S PROPERTY.
DO NOT DISCLOSE TO OR DUPLICATE FOR OTHERS
EXCEPT AS AUTHORIZED BY SAMSUNG.

DRX

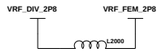

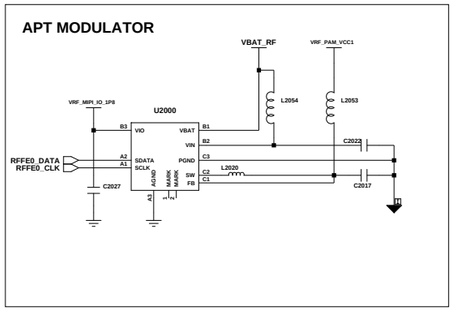

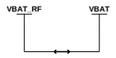

APT MODULATOR

GND

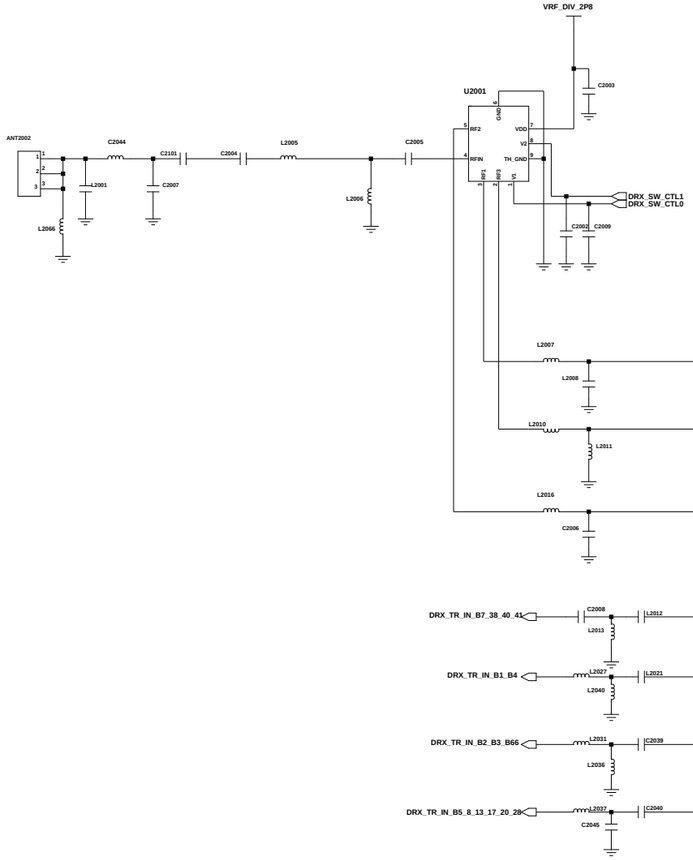

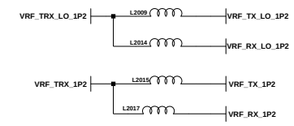

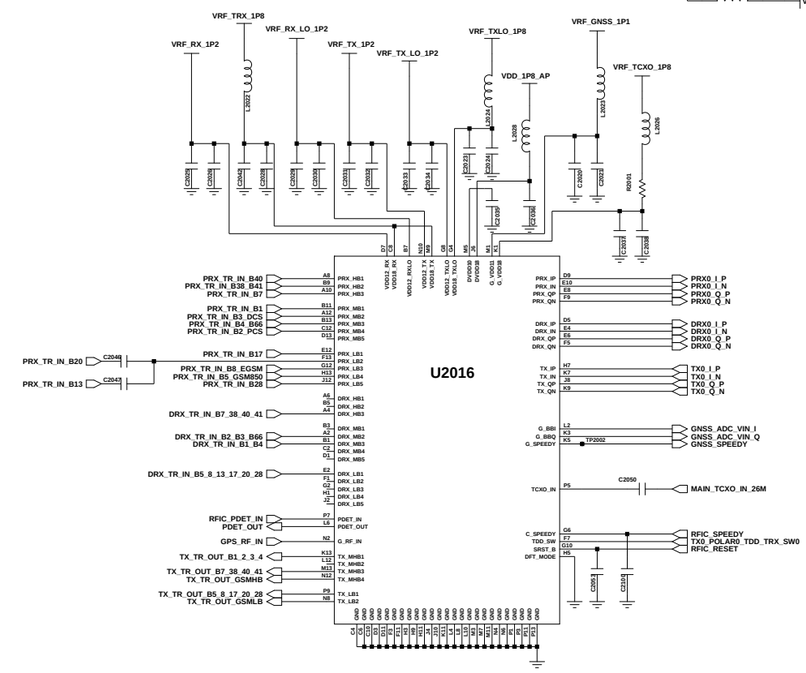

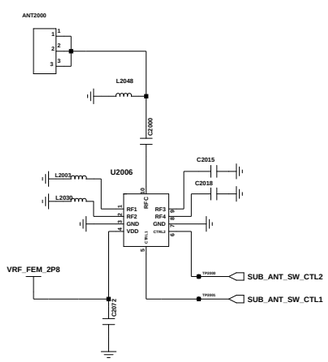

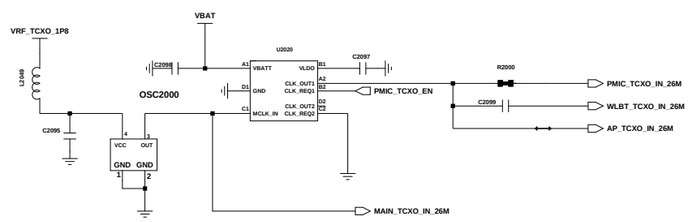

TRANCEIVER

Engineer				DRX, TRANCEIVER	
Drawn by:					
R&D CHK:				TITLE: SM-M305F	Size:
DOC CTRL CHK:					
MFG ENGR CHK:					
Changed by:	Date Changed:	Time Changed:	QA CHK:	Drawing Number	2/7

SAMSUNG CONFIDENTIAL
THIS DOCUMENT CONTAINS CONFIDENTIAL
PROPRIETARY INFORMATION THAT IS
SAMSUNG ELECTRONICS CO'S PROPERTY.
DO NOT DISCLOSE TO OR DUPLICATE FOR OTHERS
EXCEPT AS AUTHORIZED BY SAMSUNG.

BT/WIFI

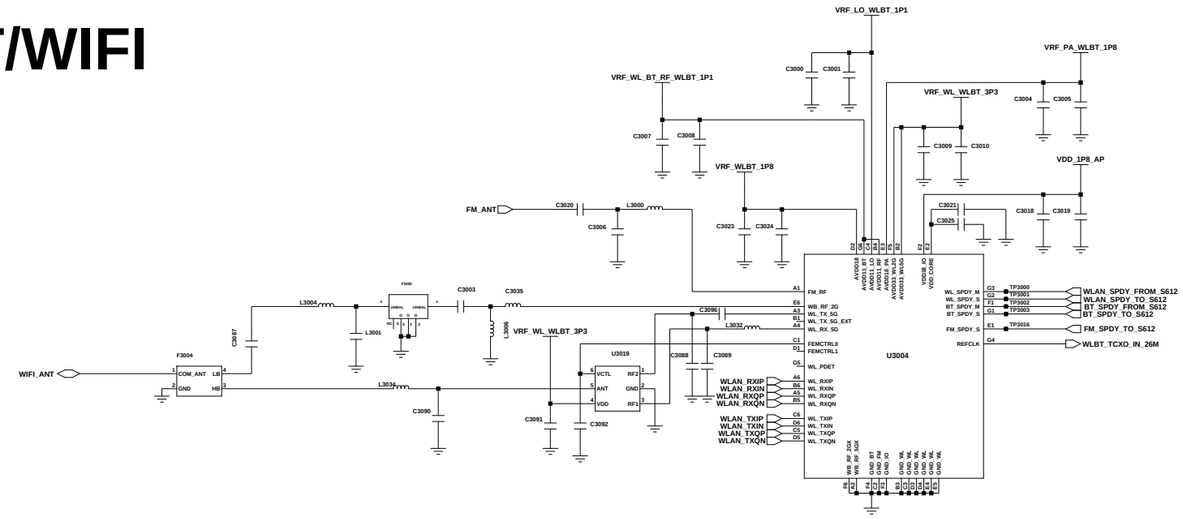

NFC

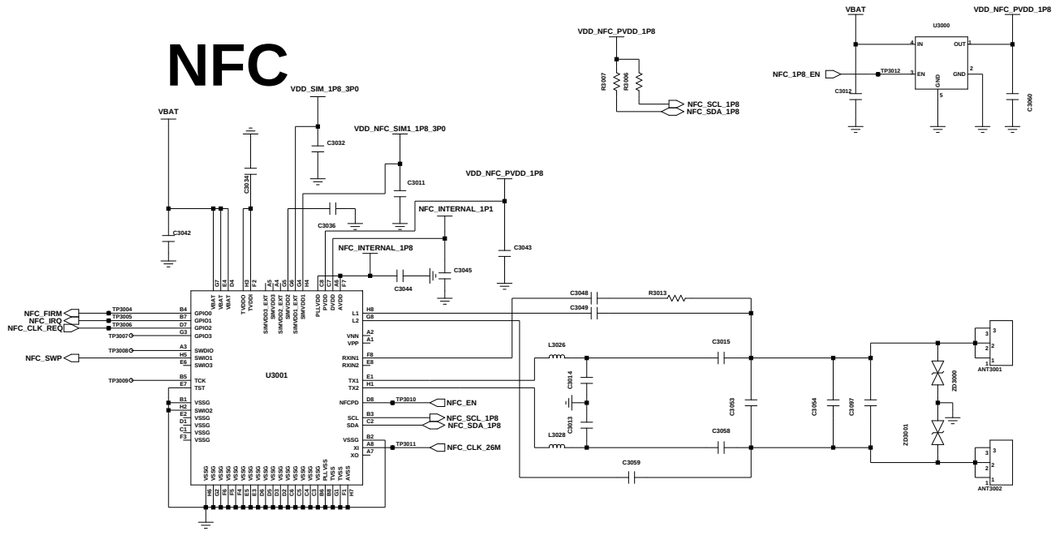

NFC	NFC PART	Power supply of SIM1		NFC GPIO 14	
	U3000	R6001	R6018	R4012	R4013
NFC	CONNECT	short	open	10K ohm	open
nonNFC	NC	open	short	open	10K ohm

GPS

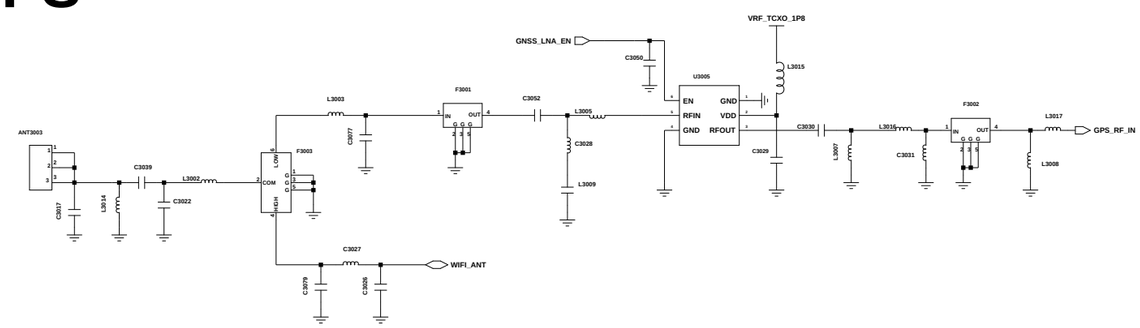

SENSORS

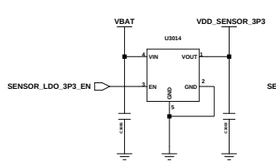

SENSOR LDO

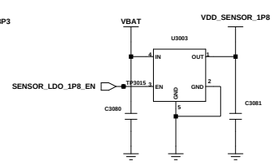

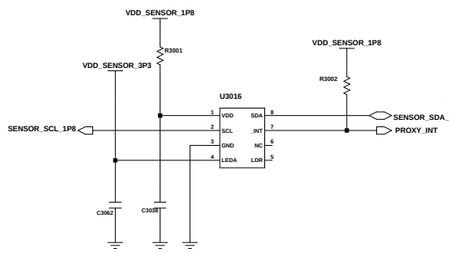

Proxi Sensor

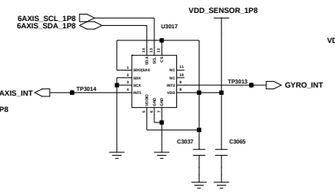

6 AXIS(ACC+GRYO)

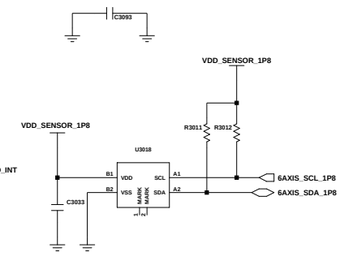

MAGNETIC

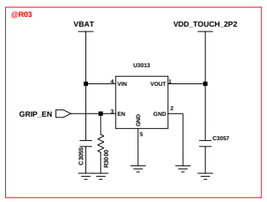

Grip Sensor

Engineer:	SENSOR, WIFI/BT/GPS/NFC
Drawn by:	
R&D CHK:	TITLE: SM-M305F
DOC CTRL CHK:	Size:
MFG ENGR CHK:	
Changed by: user93 / Date Changed: / Time Changed: / QA CHK:	REV: / Drawing Number: / Page: 3/7

SAMSUNG CONFIDENTIAL
THIS DOCUMENT CONTAINS CONFIDENTIAL
AND PROPRIETARY INFORMATION OF
SAMSUNG ELECTRONICS CO'S PROPERTY.
DO NOT DISCLOSE TO OR DUPLICATE FOR OTHERS
EXCEPT AS AUTHORIZED BY SAMSUNG.

EXYNOS7904 (Lassen O+)

POP LP4 4G : 1105-002915
POP LP4 6G : 1105-002939

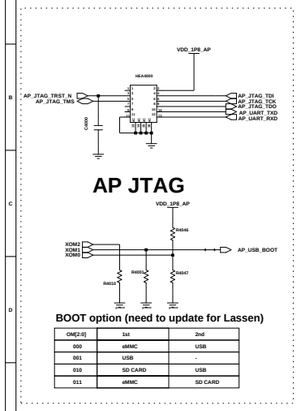

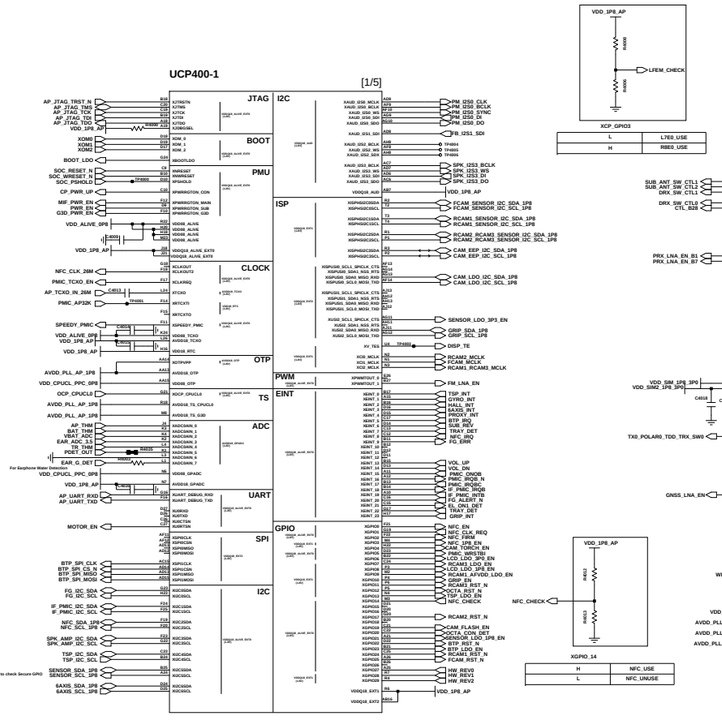

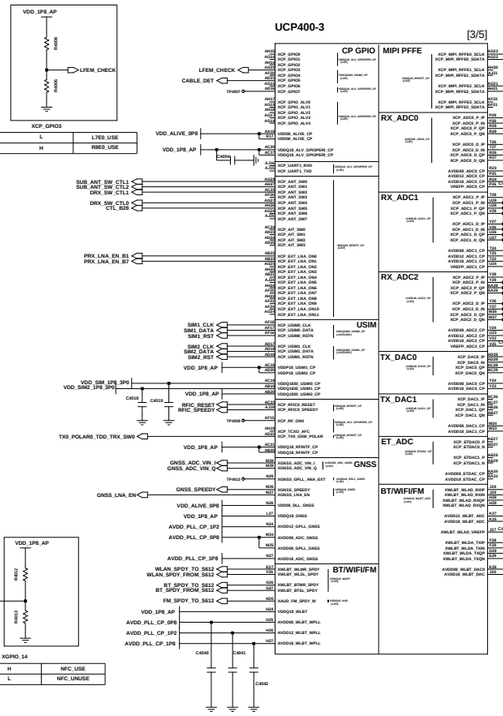

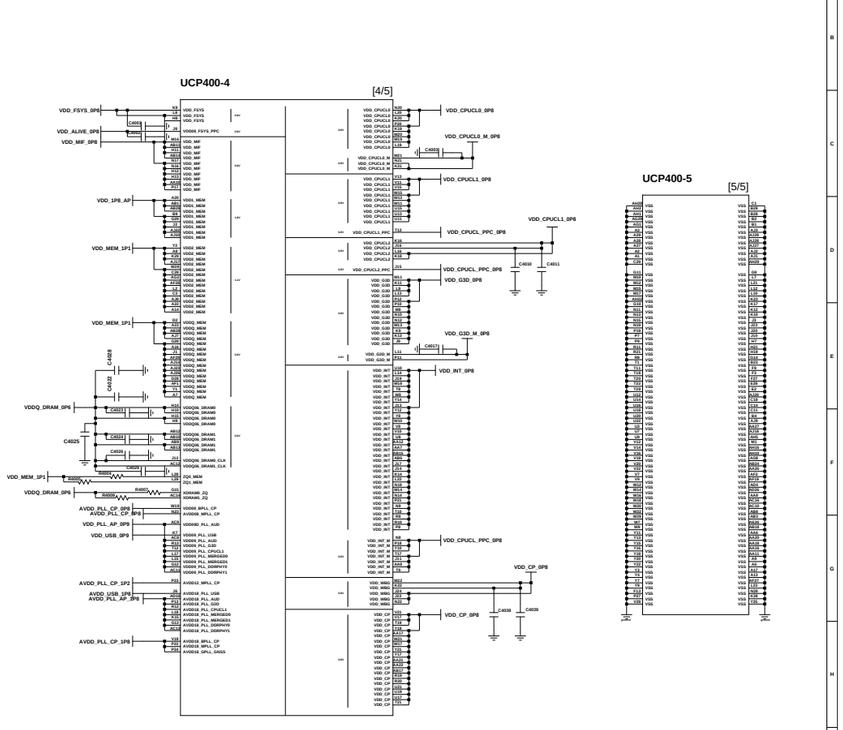

I2C Pull-up Register

XI2C

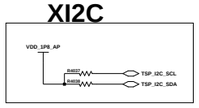

XISPI2C

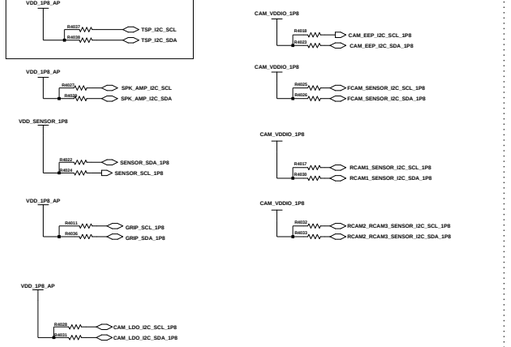

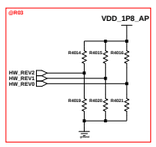

H/W Revision Setting

REV	HW_VER2	HW_VER1	HW_VER0
REV00	0	0	0
REV00A	0	0	1
REV01	0	1	0
REV02	0	1	1
REV03	1	0	0

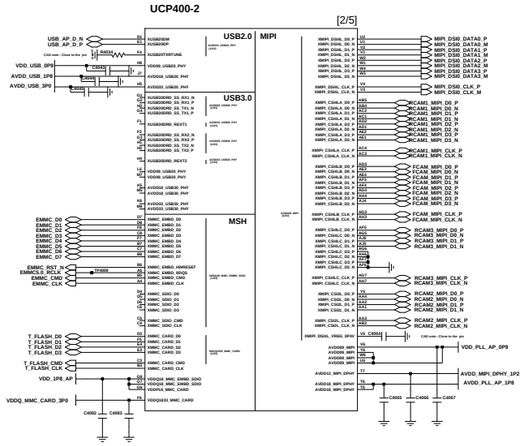

AP Decap

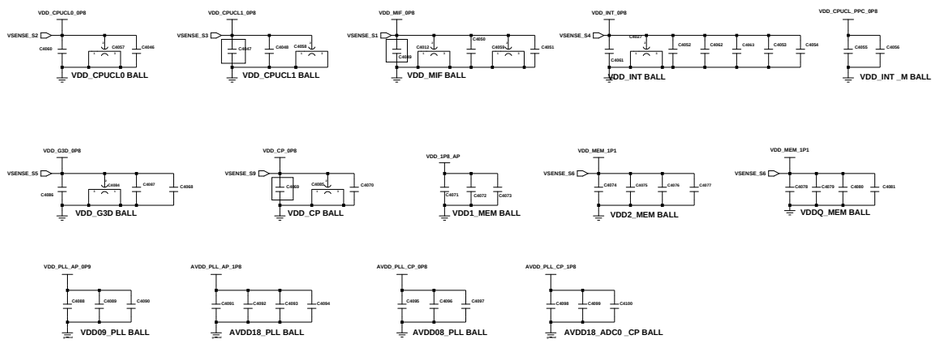

PCB JTAG

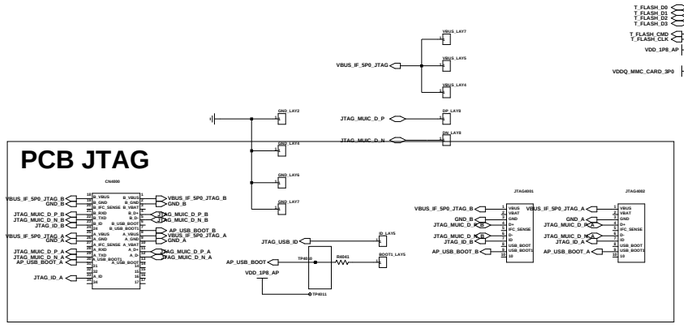

Engineer:			
Drawn by:	AP		
R&D CHK:	TITLE:		Size
DOC CTRL CHK:	SM-M305F		
MFG ENGR CHK:			
Q/A CHK:	SEC	Drawing Number:	Page: 47

Changed by: Date Changed: Time Changed:

SAMSUNG CONFIDENTIAL
THIS DOCUMENT CONTAINS CONFIDENTIAL
AND PROPRIETARY INFORMATION OF
SAMSUNG ELECTRONICS CO'S PROPERTY.
DO NOT DISCLOSE TO OR DUPLICATE FOR OTHERS
EXCEPT AS AUTHORIZED BY SAMSUNG.

MAIN_PMIC

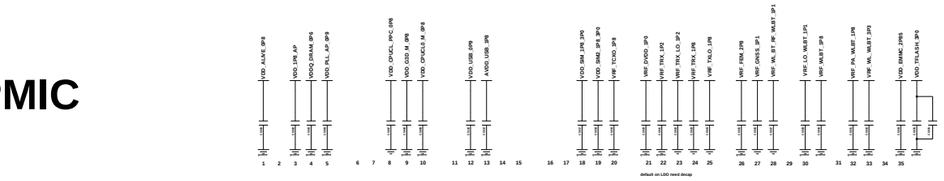

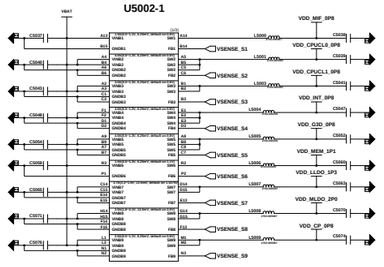

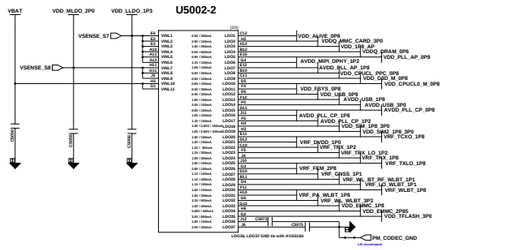

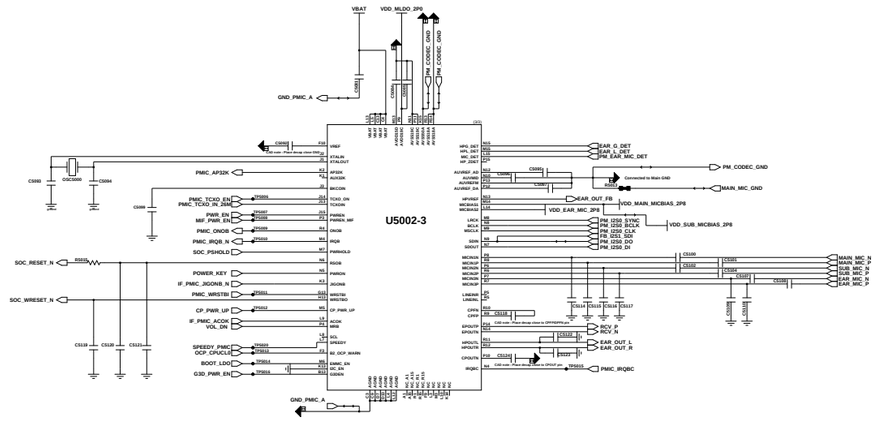

IF_PMIC

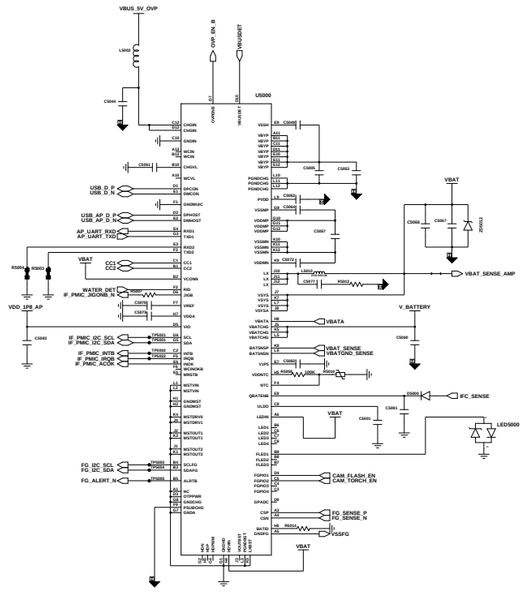

IF PMIC(S2MU106)

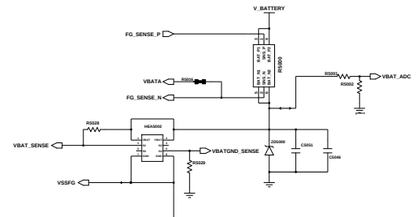

BATTERY CON

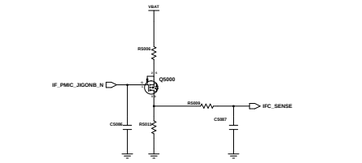

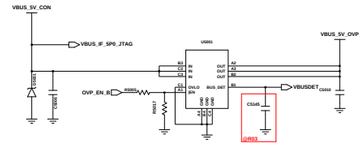

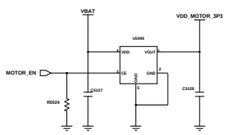

MOTOR

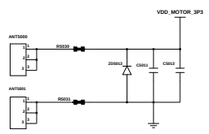

MOTOR

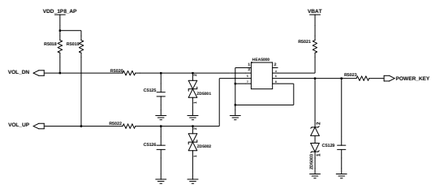

VOLUME KEY POWER KEY

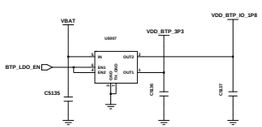

FPS PWR

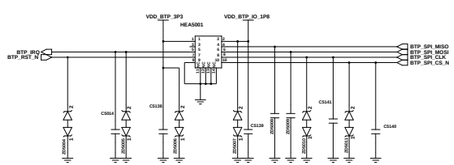

Finger Print Sensor

eMMC

64GB : 1107-002633
128GB : 1107-002639

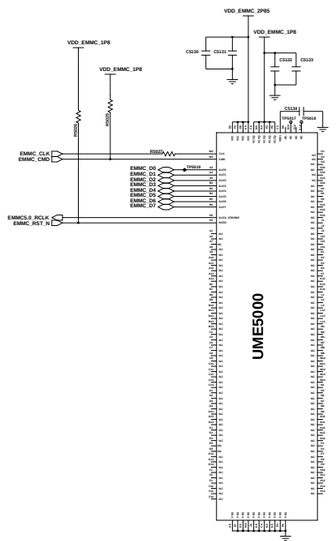

Engineer:	PMIC/IF PMIC/eMMC
Drawn by:	
R&D CHK:	TITLE: SM-M305F
DOC CTRL CHK:	
MFG ENGR CHK:	
QA CHK:	Drawing Number:

Changed by: | Date Changed: | Time Changed: | REV | Page 1p1

SAMSUNG CONFIDENTIAL
THIS DOCUMENT CONTAINS CONFIDENTIAL PROPRIETARY INFORMATION THAT IS SAMSUNG ELECTRONICS CO'S PROPERTY. DO NOT DISCLOSE TO OR DUPLICATE FOR OTHERS EXCEPT AS AUTHORIZED BY SAMSUNG.

AUDIO

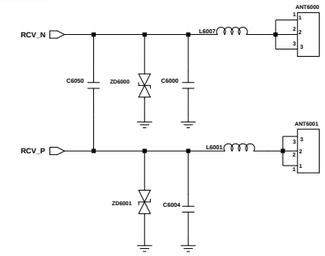

RCV CONTACT

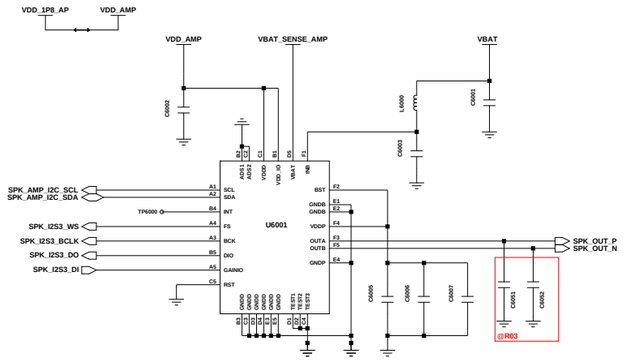

Audio AMP

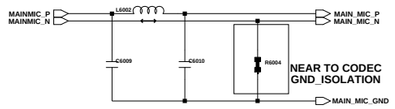

MAIN MIC

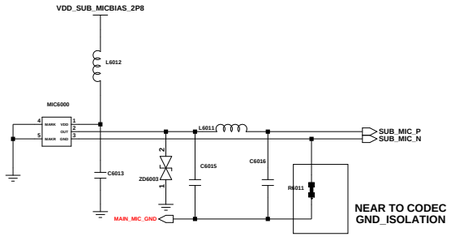

Sub MIC

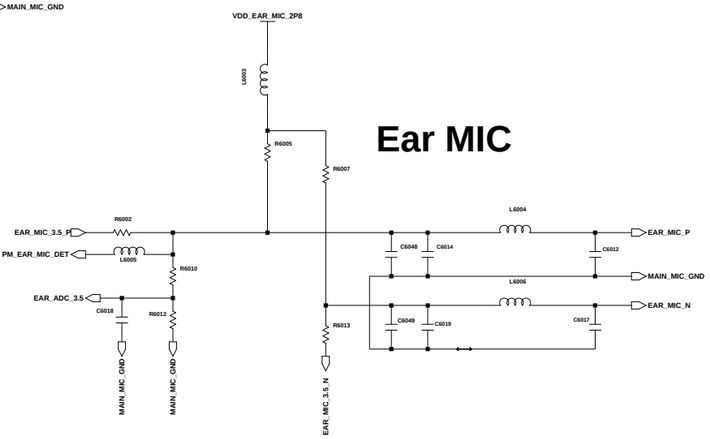

Ear MIC

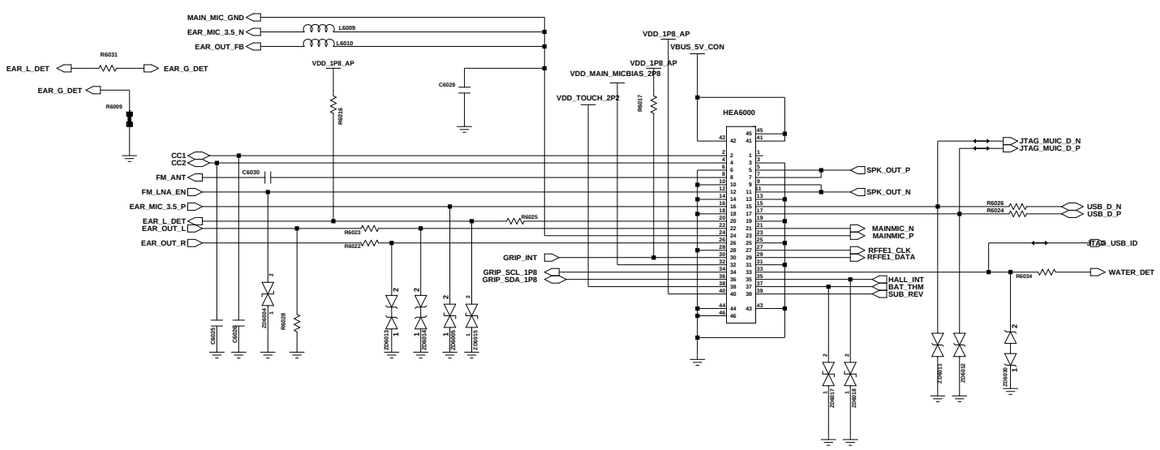

MAIN FPCB

SIM & SD CARD (3IN3)

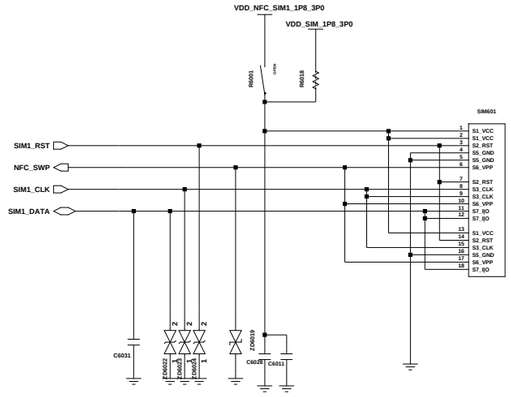

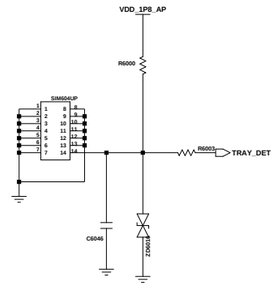

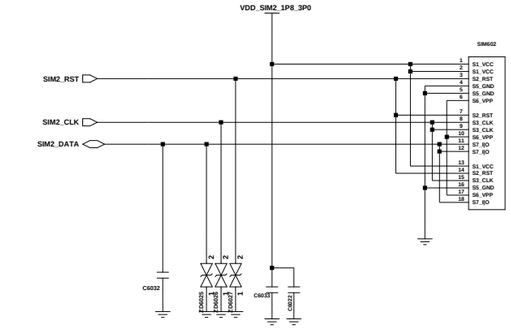

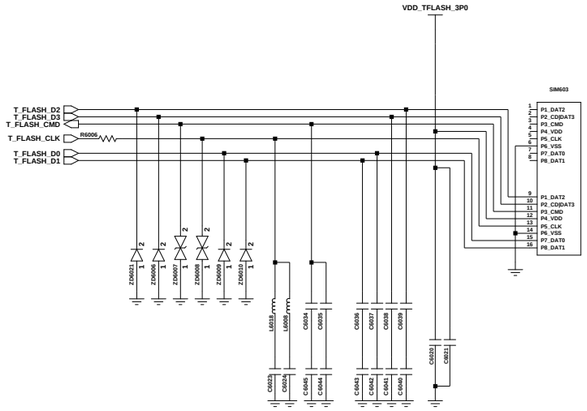

SHIELD CAN

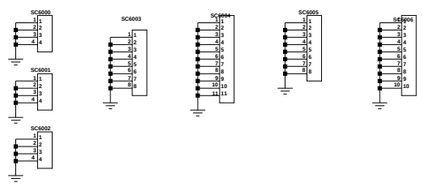

2D BARCODE

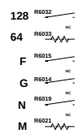

	FN (EUR, CIS)	F (MEA)	G (SEA, SWA)	GN (BR)	M	
R6015			Solder	Solder	Solder	
R6014	Solder	Solder				
R6019	Solder					
R6021				Solder	Solder	

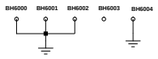

BOTH HOLE

Engineer:	
Drawn by:	AUDIO, SIM/SD, SHIELD CAN
R&D CHK:	TITLE: SM-M305F
DOC CTRL CHK:	
MFG ENGR CHK:	

Size:

Changed by:	Date Changed:	Time Changed:	QA CHK:	REV:	Drawing Number:	Page:6/7

SAMSUNG CONFIDENTIAL
THIS DOCUMENT CONTAINS CONFIDENTIAL
PROPRIETARY INFORMATION THAT IS
SAMSUNG ELECTRONICS CO'S PROPERTY.
DO NOT DISCLOSE TO OR DUPLICATE FOR OTHERS
EXCEPT AS AUTHORIZED BY SAMSUNG.

CAMERA_PART

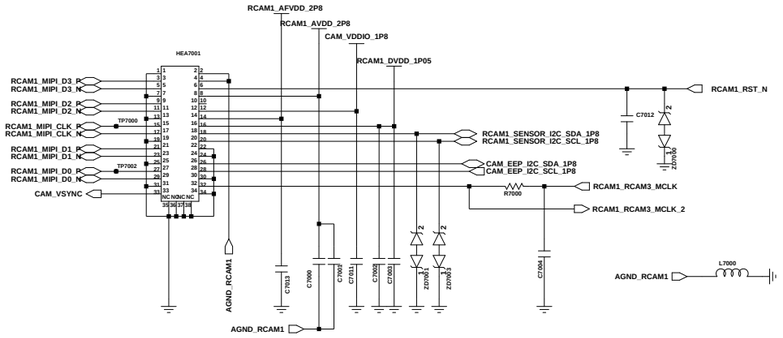

RCAM1_13M CAMERA(34PIN)

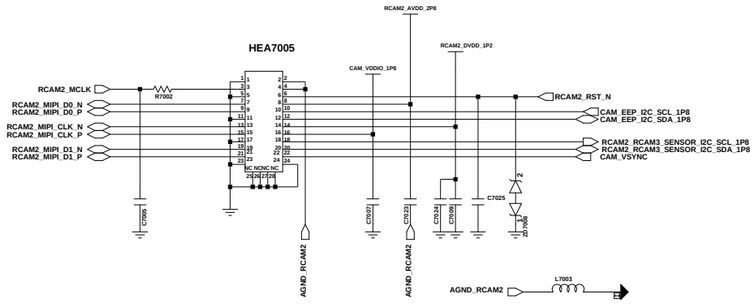

RCAM2_SUPER WIDE_5M CAMERA(24PIN)

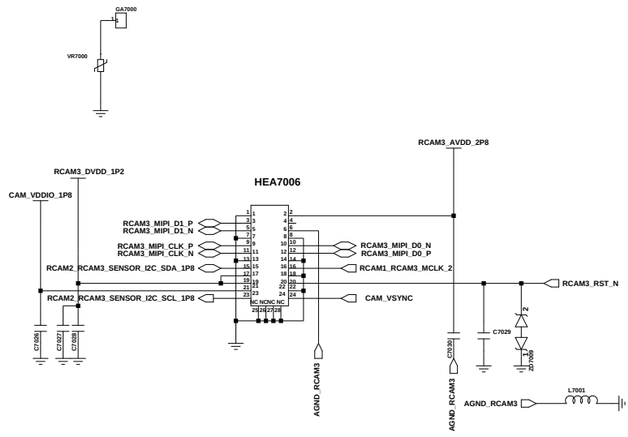

RCAM3_BOKEH_5M CAMERA(24PIN)

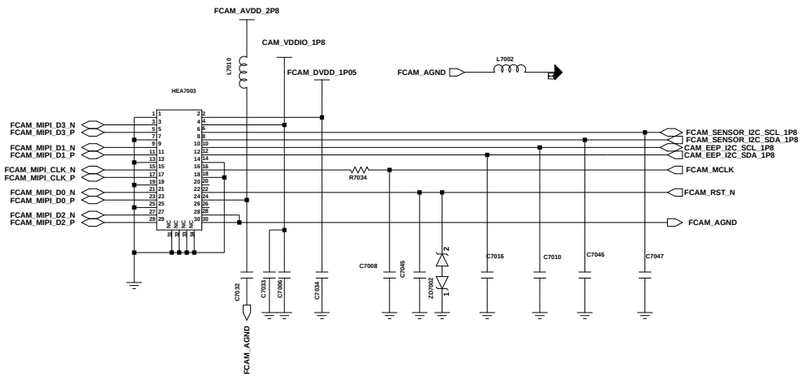

FRONT_16M CAMERA (30PIN)

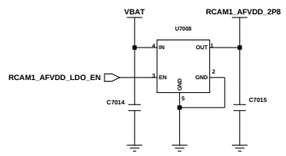

RCAM1 LDO

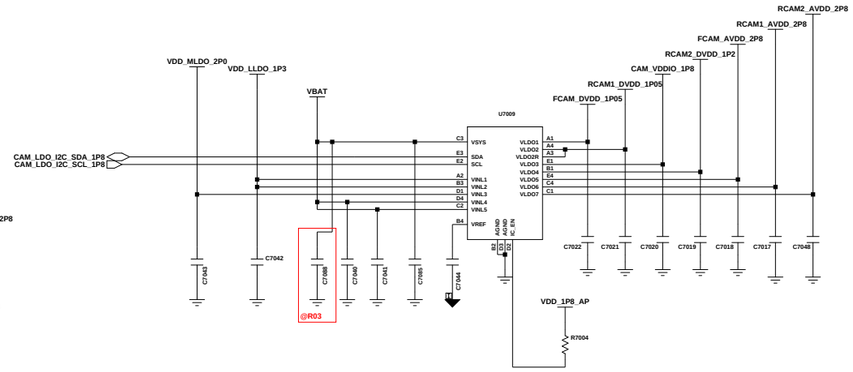

CAM PMIC

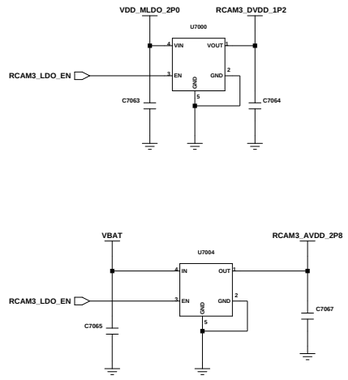

RCAM3 LDO

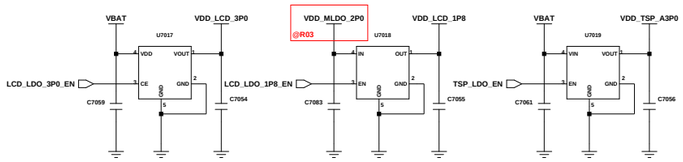

OCTA LDO

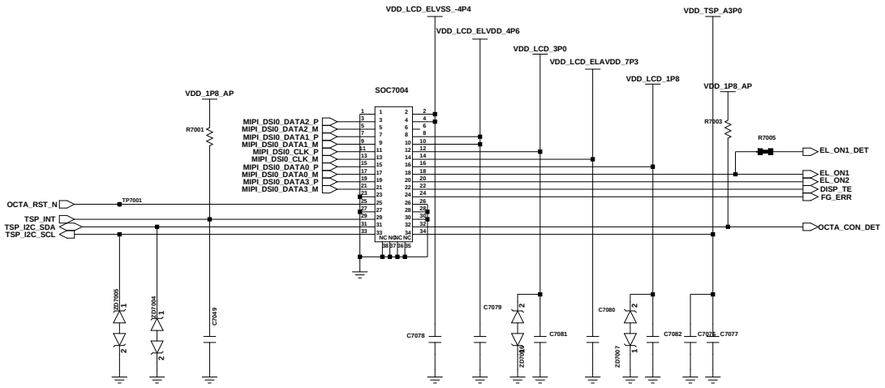

6.38" FHD+ DISPLAY

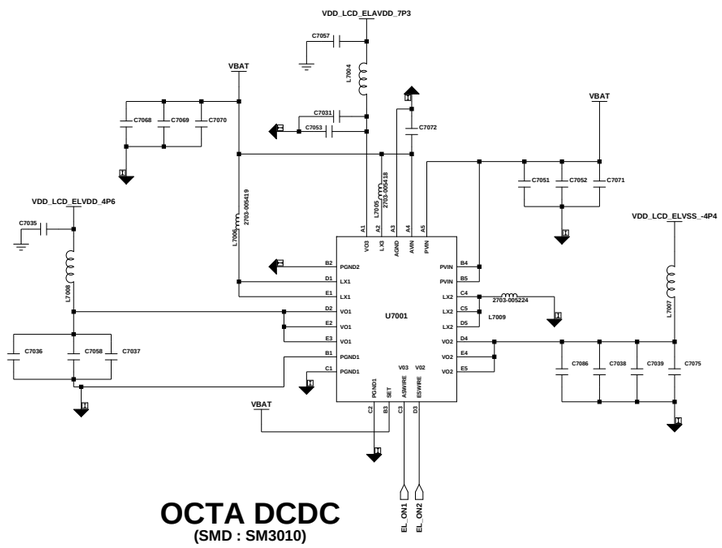

OCTA DCDC
(SMD : SM3010)

Engineer:			
Drawn by:	CAMERA, DISPLAY		
R&D CHK:	TITLE:	Size:	
DOC CTRL CHK:	SM-M305F		
MFG ENGR CHK:			
Changed by:	Date Changed:	Time Changed:	QA CHK:
REV	Drawing Number:	Page: 2/7	

SM-M305F
Common

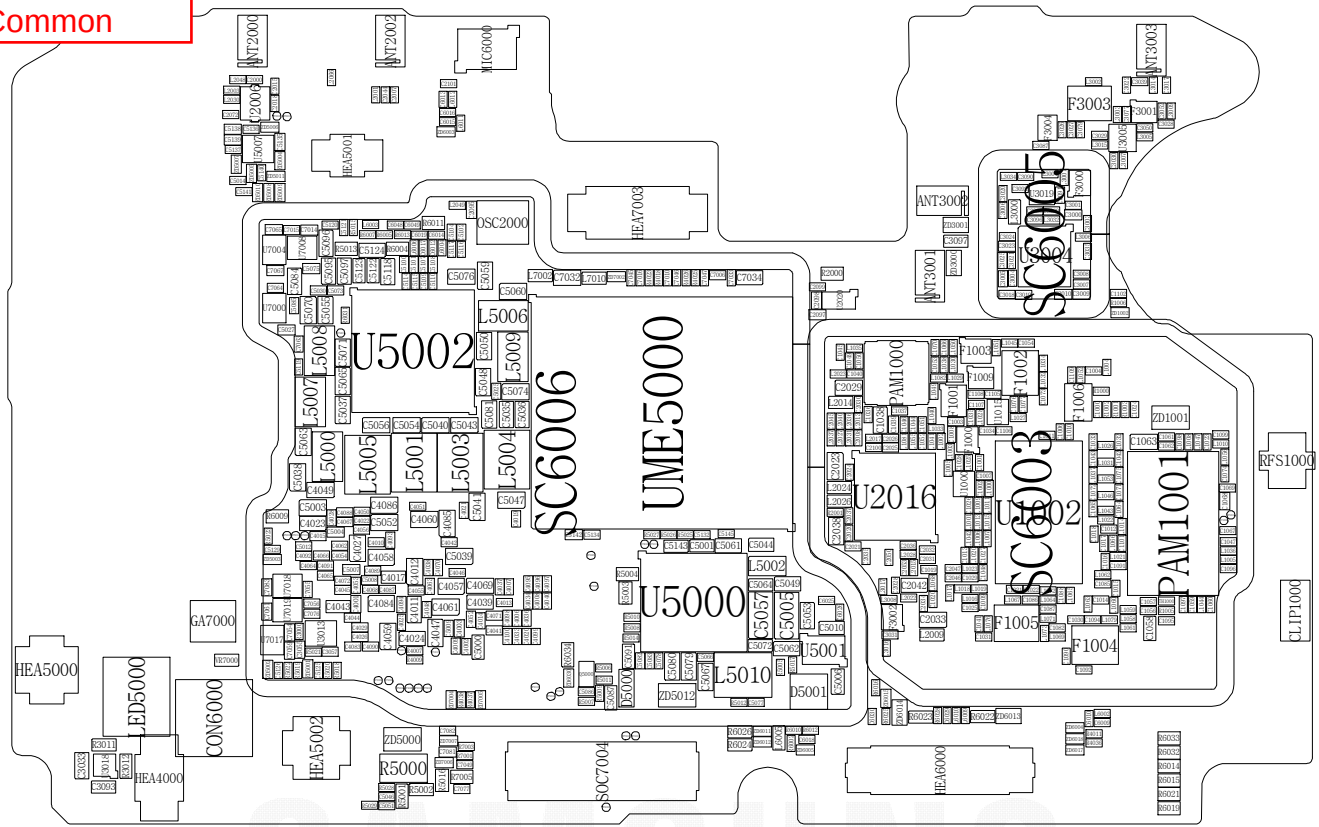
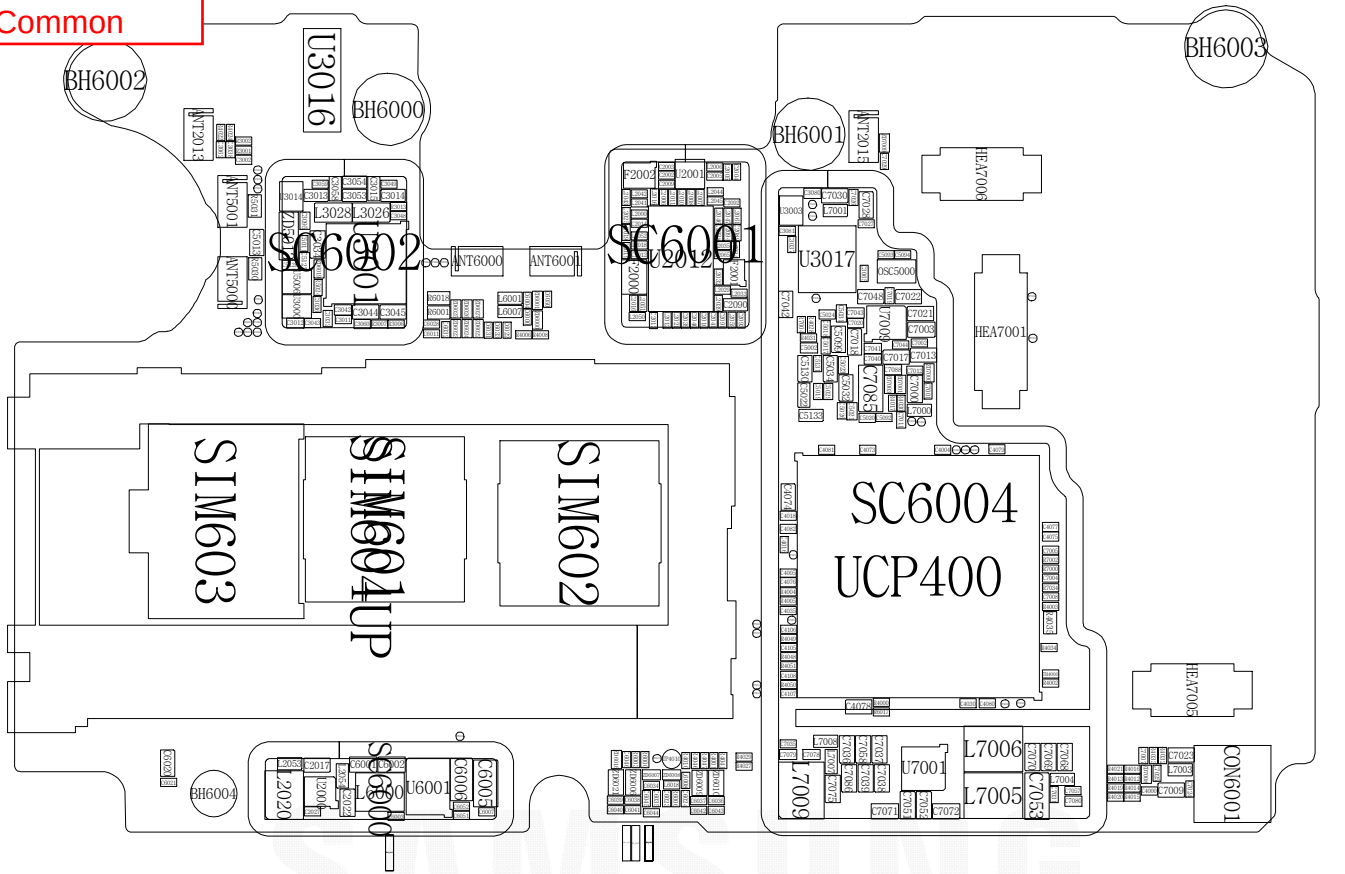
SM-M305F
Common